PR4 PARTS CATALOGUE 125/200

October 2009 - 2nd Edition

Preface

Whenever you need to replace AJP motorcycles parts, always use AJP original parts to insure your safety and keep motorcycle performance.

Catalogue consultation instructions

1. Dimensions

Dimensions of the parts in this catalogue are in millimetres, except when specified otherwise.

2. Abbreviations

Abbreviations used in this catalogue are:

- EN – ENDURO version
- SM – SUPERMOTO version
- RH – Right hand
- LH – Left hand
- assy - assembly
- Z – nr of teeth

3. Standard parts

The standard parts that are used such as bolts and screws, nuts, washers and circlips are identified by theirs DIN norm, followed by their dimensions, p.e.:

- Screw DIN 912 M6 x 35,

means that the screw corresponds to the DIN 912 norm and its dimensions are M6 x 35 mm.

4. Notice concerning modifications

When AJP/MOTOS decides to introduce a modification, it will be send a notification concerning the modification, without be necessary to proceed to a previous warning or other obligation.

5. Serial number

This catalogue is applicable from the serial number:

- TX9PR3*******60***

6. Notes

The drawings that are presented are only for support a quick identification of the parts, they cannot be used to parts assembling.
For that, please consult the AJP Service Manual.

PL001EN – CYLINDER HEAD	PL002EN – CAMSHAFT / VALVE	PL003EN – CYLINDER	PL004EN – CRANKSHAFT / PISTON	PL005EN – CAMCHAIN TENSIONER
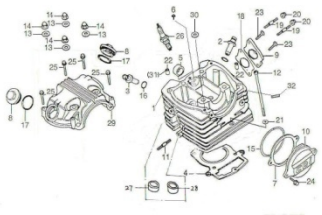	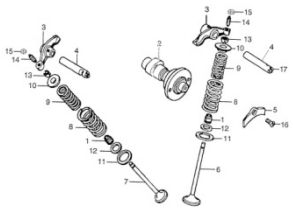	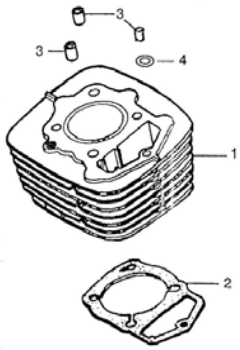	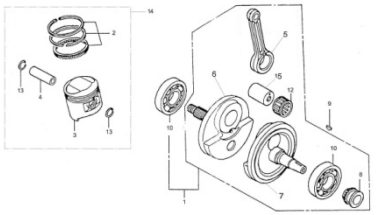	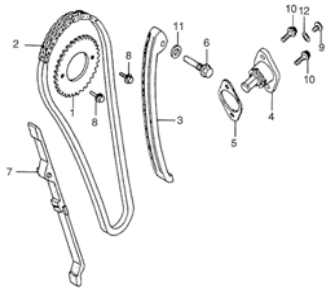
PL006EN – CRANKCASE	PL007EN – TRANSMISSION	PL008EN – RIGHT CRANKCASE COVER	PL009EN – CLUTCH	PL010EN – OIL PUMP
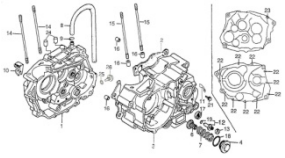	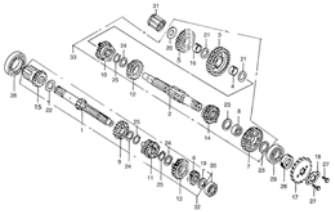	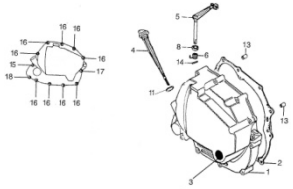	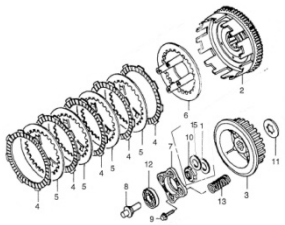	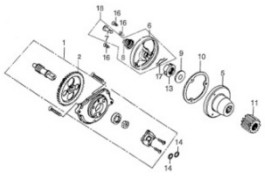

PL011EN – LEFT CRANKCASE COVER	PL012EN – GENERATOR	PL013EN – GEARSHIFT DRUM / SPINDLE	PL014EN – STARTING MOTOR	PL015EN – CARBURETTOR
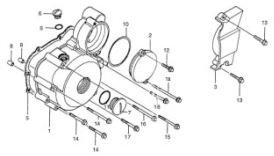	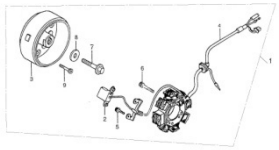	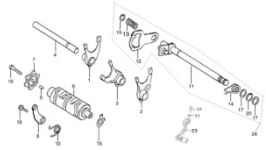	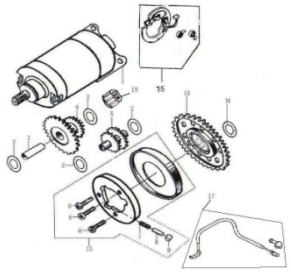	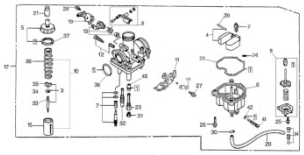
PL016EN – OIL COOLER	PL017EN – AIR FILTER	PL018EN – MUFFLER MX	PL019EN - MUFFLER	PL020EN – REAR SWING ARM
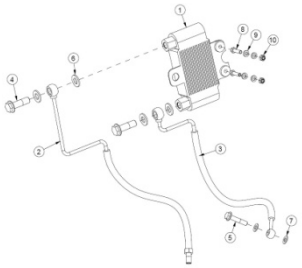	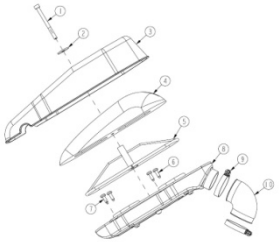	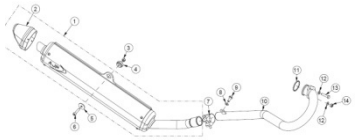	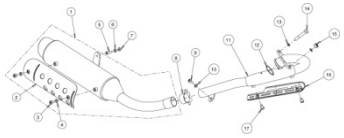	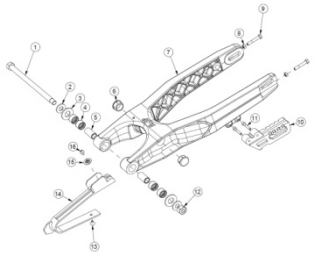

PL021EN – FRAME	PL022EN – STAND / FOOTPEG	PL023EN – REAR BRAKE PEDAL	PL024EN – FUEL TANK	PL025EN – FRAME COVER
PL026EN – FRONT PLASTICS	PL027EN – MAIN CONTROLS	PL028EN – HANDLEBAR	PL029EN – SEAT	PL030EN – PAIOLI FRONT FORK

PL031EN – FRONT WHEEL	PL032EN – FRONT CALIPER	PL033EN – REAR CUSHION LEVER	PL034EN – REAR SHOCK ABSORBER	PL035EN – REAR SHOCK ABSORBER PRO
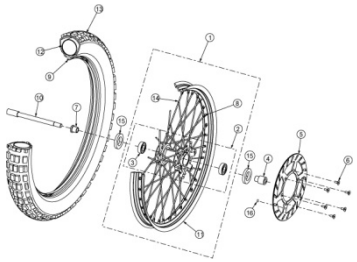	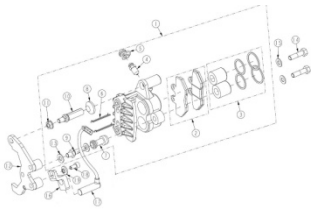	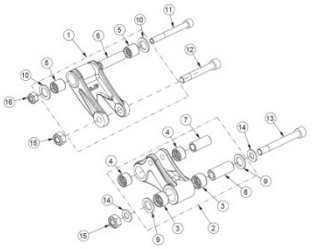	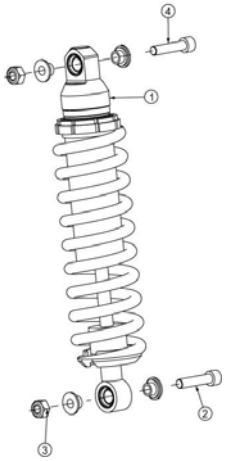	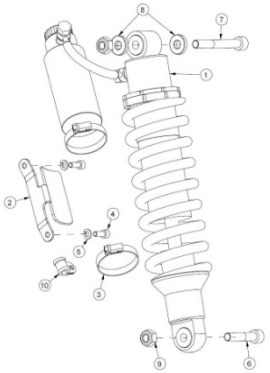
PL036EN – REAR WHEEL	PL037EN – REAR BRAKE	PL038EN – FRONT MASTER CYLINDER	PL039EN – REAR FENDER	PL040EN – BATTERY
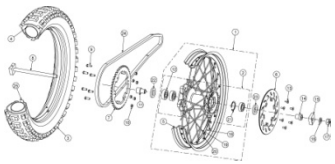	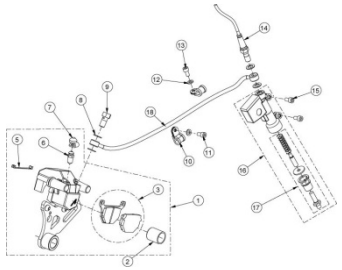	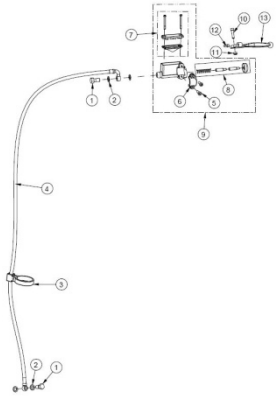	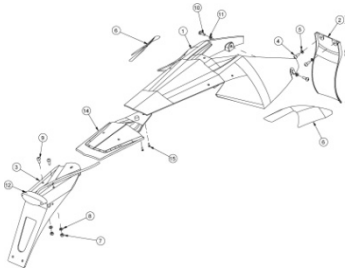	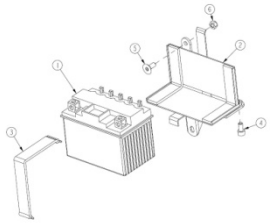

PL041EN – COCKPIT	PL042EN – TURN SIGNAL	PL043EN – ELECTRICAL	PL044EN – WIRING HARNESS	
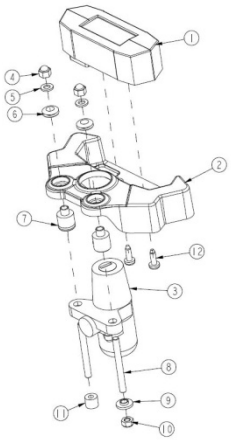	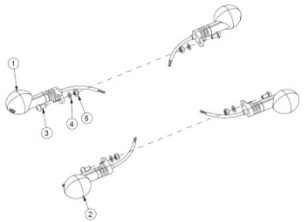	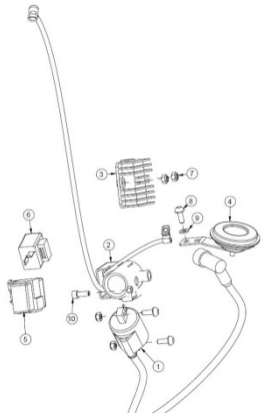	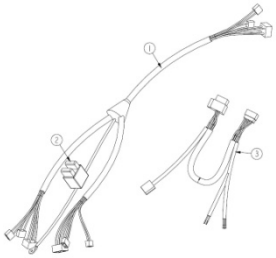	

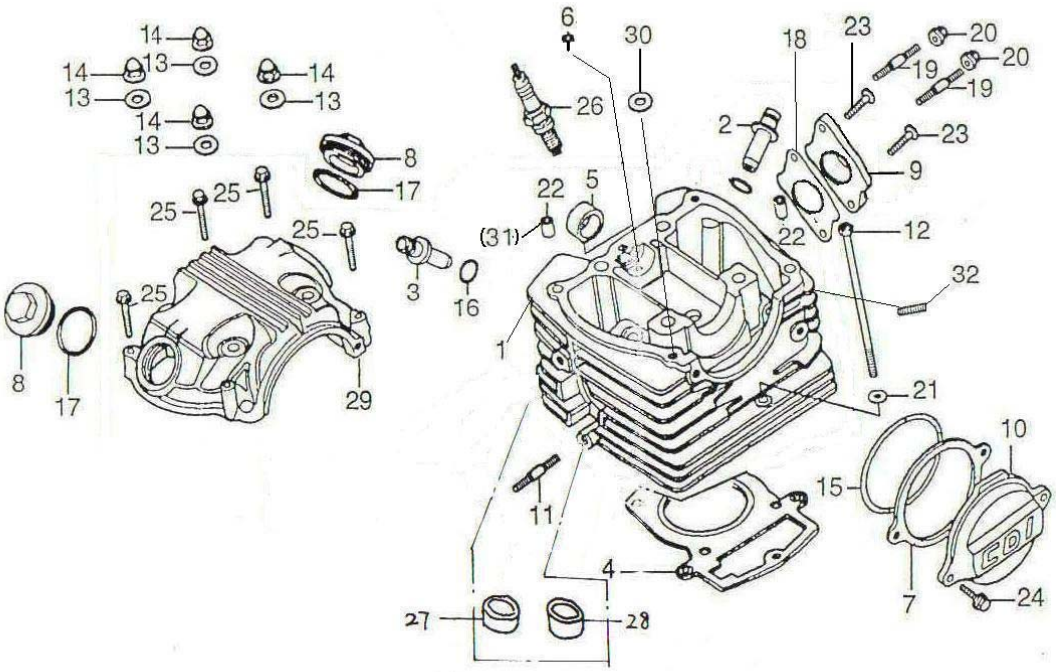

AJP	PARTS LIST	Ref[a]:	PL001EN
		Model:	PR4
	CYLINDER HEAD	Date:	October 2009
		Edition:	2nd

ITEM	REFERENCE	DESIGNATION	125	200
1	1122B-I049-0000	Cylinder Head 125	1	0
1	1122B-LA01-0000	Cylinder Head 200	0	1
2	11224-I006-0000	Intake Valve Guide	1	1
3	11225-I006-0000	Exhaust Valve Guide	1	1
4	9021A-I049-0000	Cylinder Head Gasket	1	0
4	9022B-L044-0000	Cylinder Head Gasket	0	1
5	1512A-I006-0000	Camshaft Dowel Pin	1	0
5	1512A-L044-0000	Camshaft Dowel Pin	0	1
6	11015-I006-0000	Rubber Pin	1	0
7	11004-I006-0000	Cylinder Head Side Cover Gasket	1	1
8	11231-I006-0000	Tapped Adjust Cap	2	2
9	91A-09223-00-00	Carburettor Insulator	1	0
9	00MTS01A0020	Carburettor Insulator	0	1
10	11005-I006-0AJP	Cylinder Head Side Cover	1	1
11	U3032-0000-0000	Stud Bolt M6x30mm	2	2
12	91104-I006-0000	Bolt M6x110mm	1	0
12	91121-L044-0000	Bolt M6x113mm	0	1
13	11007-I006-0000	Sealing Washer 8mm	4	4
14	11008-I006-0000	Hex. Cup Nut 8mm	4	4
15	90109-I006-0000	O.-Ring 75x2.65mm	1	1
16	90112-I006-0000	O-Ring 10x1.6mm	2	2
17	90104-I006-0000	O-Ring 35x3mm	2	2
18	91A-08222-00-00	Carburettor Insulator Gasket	1	0
18	00MTS01A0021	Carburettor Insulator Gasket	0	1
19	91138-I008-0000	Stud Bolt M6x35mm	2	0
19	U3032-0000-0000	Stud Bolt M6x30mm	0	2
20	PC0985006000	Nut Din985 M6	2	2
21	91307-I006-0000	Seal Washer 6.5x12.8x2mm	1	1
22	91502-I006-0000	Dowel Pin 8x14mm	2	1
23	PF7991006025	Screw Din7991 M6x25mm	0	2
24	S7013-0000-0000	Bolt M6x20mm	2	2
25	S7016-0000-0000	Cylinder Head Bolt M6x35mm	4	4
26	81300-1049-0000	Spark	1	1
27	11222-I006-0000	Exhaust Valve Seat	1	0
28	12223-I006-0000	Intake Valve Seat	1	0
29	11201-I006-0000	Cylinder Head Cover 125	1	0
29	11226-L044-0000	Cylinder Head Cover 200	0	1
30	90102-L044-0000	Rubber Seal Washer	0	1
31	91502-I006-0AJP	Dowel Pin 8x12mm	0	1
32	00MTS01A0022	Vacuum Tube	0	1

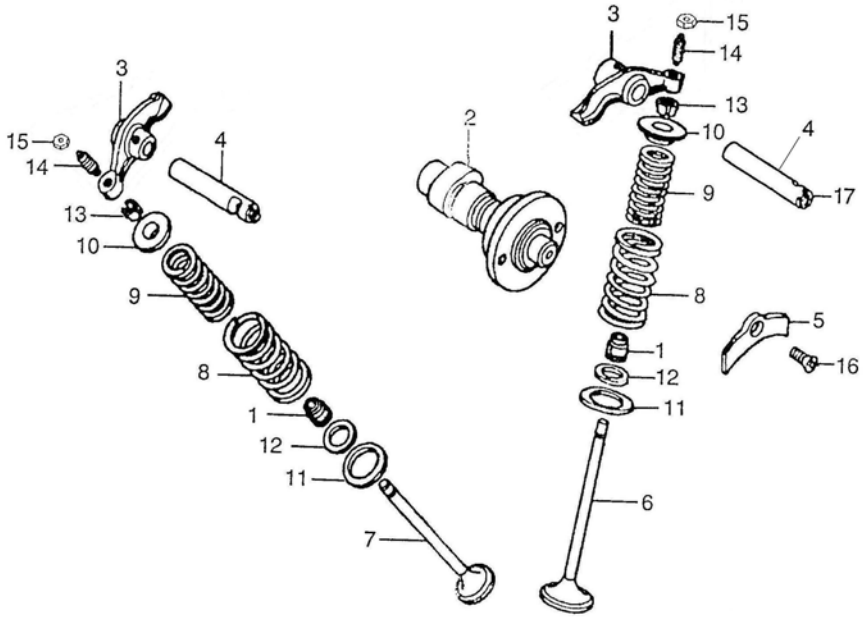

AJP	PARTS LIST	Ref[a]:	PL002EN
		Model:	PR4
	CAMSHAFT / VALVE	Date:	October 2009
		Edition:	2nd

ITEM	REFERENCE	DESIGNATION	125	200
1	1572B-I006-0000	Valve Guide Seal	2	2
2	15100-I006-0000	Camshaft 125	1	0
2	15100-L044-0000	Camshaft 200	0	1
3	15401-I006-0000	Valve Rocker Arm	2	2
4	15402-I006-0000	Rocker Arm Shaft IN/EX	2	0
4	15402-L044-0000	Rocker Arm Shaft EX	0	1
5	11200-I006-0000	Shaft Holder	1	1
6	15701-I006-0000	Intake Valve	1	0
6	15701-LA01-0000	Intake Valve	0	1
7	15702-I006-0000	Exhaust Valve	1	0
7	15702-LA01-0000	Exhaust Valve	0	1
8	15703-I006-0000	Outer Valve Spring	2	2
9	15704-I006-0000	Inner Valve Spring	2	2
10	15705-I006-0000	Valve Spring Container	2	2
11	15706-I006-0000	Valve Spring Outer Sealing	2	2
12	15708-I006-0000	Valve Spring Inner Sealing	2	2
13	15707-I006-0000	Valve Cotter	2	0
13	15707-I008-0000	Valve Cotter	0	2
14	15404-I006-0000	Afinador Válvula	2	2
15	15403-I006-0000	Tapped Adjust Screw	2	2
16	15403-L044-0002	Bolt M6x16mm	1	1
17	15402-L044-0002	Rocker Arm Shaft IN	0	1

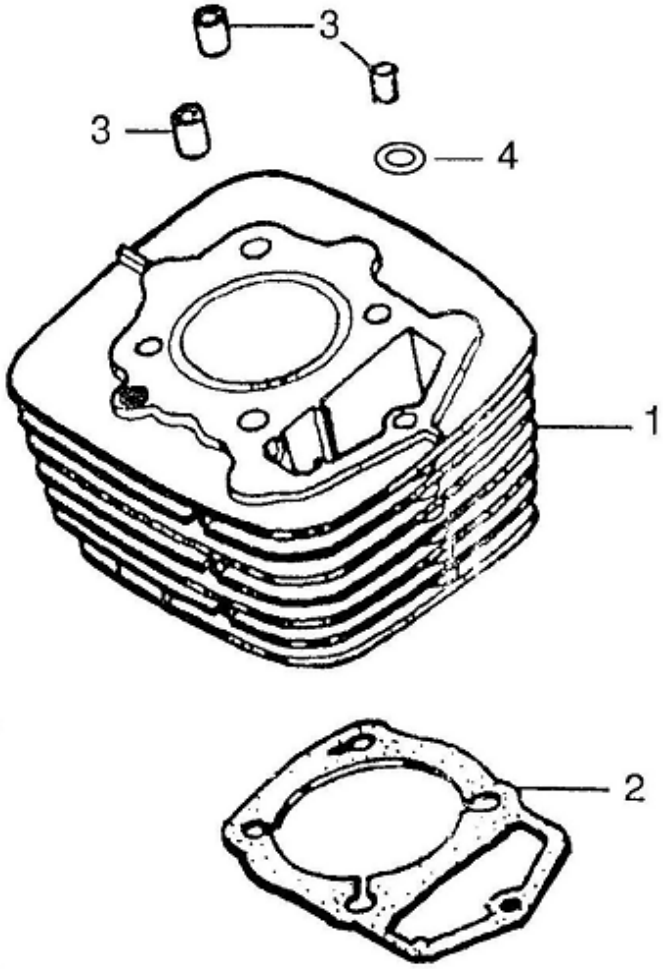

AJP	PARTS LIST		Ref[a]:	PL003EN
			Model:	PR4
	CYLINDER		Date:	October 2009
			Edition:	2nd
ITEM	REFERENCE	DESIGNATION	125	200
1	110B-I049-0000	Cylinder 125	1	0
1	110B-L044-0001	Cylinder 200	0	1
2	90205-I006-0000	Cylinder Gasket 125	1	0
2	90205-L044-0000	Cylinder Gasket 200	0	1
3	91506-I008-0000	Dowel Pin 10x20	3	3
4	11014-I006-0000	O-Ring 10x1.6	1	1

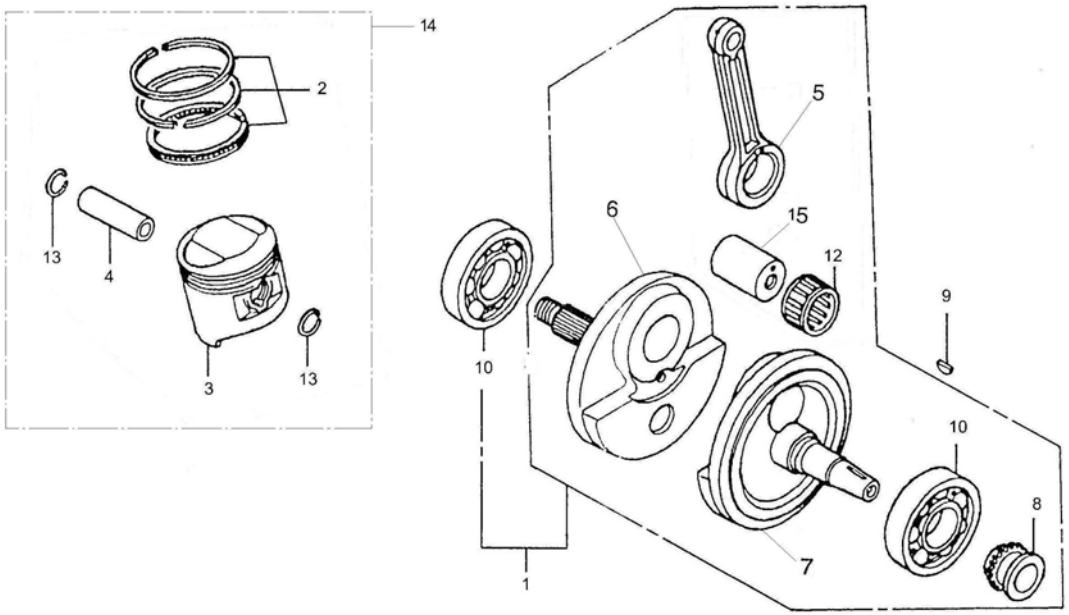

AJP	PARTS LIST	Ref[a]:	PL004EN
		Model:	PR4
	CRANKSHAFT / PISTON	Date:	October 2009
		Edition:	2nd

ITEM	REFERENCE	DESIGNATION	125	200
1	1320B-I006-0000	Crankshaft Assembly 125	1	0
1	1320B-L044-0000	Crankshaft Assembly 200	0	1
2	13103-I006-0000	Piston Ring Set 125	1	0
2	1310A-L044-0000	Piston Ring Set 200	0	1
3	13101-I006-0000	Piston 125	1	0
3	13101-LA01-0000	Piston 200	0	1
4	13102-I006-0000	Piston Pin 125	1	0
4	13102-LA01-0000	Piston Pin 200	0	1
5	13201-I006-0000	Connecting Rod 125	1	0
6	13210-I006-0000	Crankshaft RH	1	0
7	13220-I006-0000	Crankshaft LH	1	0
8	13203-I006-0000	Timing Sprocket 125	1	0
8	15101-L044-0000	Timing Sprocket 200	0	1
9	91602-I006-0000	Woodruff Key 25x14x4	1	1
10	92102-0063-28-P5	Crankshaft Bearing	2	2
12	13207-I006-0000	Connecting Rod Bearing	1	0
13	91401-I006-0000	Cir-Clip 15mm	1	0
13	91401-LA01-0000	Cir-Clip 17mm	0	1
14	13100-I006-0000	Piston Assembly 125	1	0
14	13101-LA01-0AJP	Piston Assembly 200	0	1
15	13202-I006-0000	Connecting Rod Pin	1	1

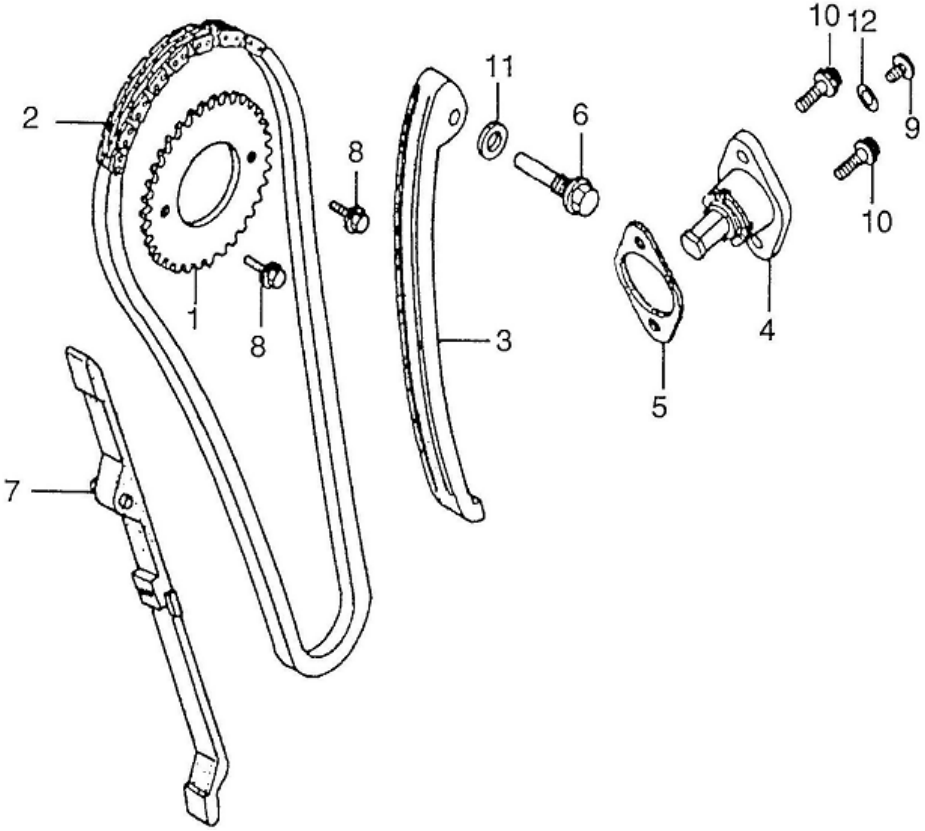

AJP	PARTS LIST	Ref[a]:	PL005EN
		Model:	PR4
	CAM CHAIN TENSIONER	Date:	October 2009
		Edition:	2nd

ITEM	REFERENCE	DESIGNATION	125	200
1	15301-I006-0000	Sprocket	1	0
1	15301-L044-0000	Sprocket	0	1
2	1532B-I006-0000	Timing Chain 125	1	0
2	1532B-L044-0000	Timing Chain 200	0	1
3	1552A-I006-0000	Timing Chain Tensioner 125	1	0
3	1552A-L044-0000	Timing Chain Tensioner 200	0	1
4	1554B-I049-0000	Tensioner Adjuster	1	1
5	90211-I049-0000	Tensioner Adjuster Gasket	1	1
6	91109-I006-0000	Timing Chain Tensioner Pivot Bolt	1	1
7	1553A-I006-0000	Timing Chain Guide 125	1	0
7	1553A-I049-0000	Timing Chain guide 200	0	1
8	S3073-0000-0000	Bolt M6x10	2	0
8	B05783000600107	Bolt M6x12	0	2
9	91120-I049-0000	Bolt M6x6	1	1
10	B0070010600147	Tensioner Adjuster Bolt M6x14	2	2
11	93301-70851514000	Sealing Washer 8x14.5x2mm	1	1
12	Q5001-0000-0000	O-Ring 1.5x9.6	1	0
12	90101-10090000180	O-Ring 1.8x9	0	1

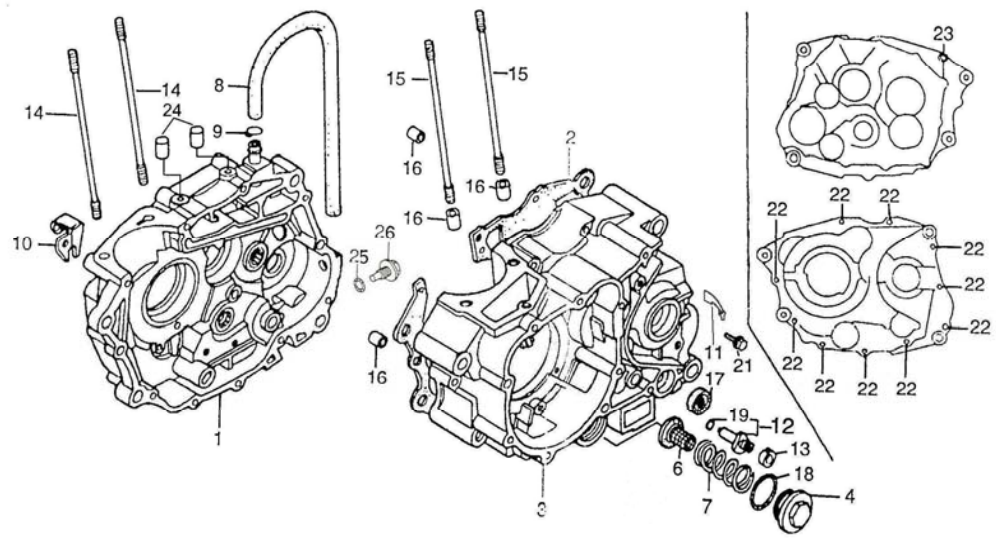

	PARTS LIST		Ref[a]:	PL006EN
			Model:	PR4
	CRANKCASE		Date:	October 2009
			Edition:	2nd
ITEM	REFERENCE	DESIGNATION	125	200
1	12200-I049-0000	Right Crankcase	1	0
1	1222B-LA22-0000	Right Crankcase	0	1
2	90205-I049-0000	Crankcase Gasket	1	0
2	90208-L044-0000	Crankcase Gasket	0	1
3	12000-I049-0000	Left Crankcase	1	0
3	1212B-L044-0000	Left Crankcase	0	1
4	11229-I006-0000	Oil Filter Cover	1	1
6	1413B-I049-0000	Oil Filter	1	1
7	14221-I049-0000	Oil Filter Spring	1	1
8	12105-I006-0000	Breather Tube	1	1
9	12103-I006-0000	Breather Tubo Holder T	1	1
10	22422-I049-0000	Clutch Wire Holder	1	1
11	12103-I008-0000	Generator Wire Holder	1	1
12	8802B-D002-0000	Neutral Contact	1	1
13	8801-D002-0000	Neutral Pin	1	1
14	91102-I049-0000	Cylinder Stud Bolt M8x212	2	0
14	91102-L044-0000	Cylinder Stud Bolt M8x215	0	2
15	91101-I049-0000	Cylinder Stud Bolt M8x224	2	0
15	91101-L044-0000	Cylinder Stud Bolt M8x229	0	2
16	91504-I049-0000	Dowel Pin 10x14mm	4	0
16	91504-I049-0AJP	Dowel Pin 10x16mm	0	4
17	90301-I006-0000	Seal 14x28x7	1	1
18	90104-I006-0000	O-Ring 35x3	1	1
19	90133-D002-0000	O-Ring 7x1.7	2	2
21	L3102-0000-0000	Bolt M6x14	1	1
22	S7019-0000-0000	Bolt M6x50	10	10
23	S7020-0000-0000	Bolt M6x60	1	1
24	82203-I049-0000	Starting Motor Dowel Pin	2	2
25	91101-10118000265	O-Ring 11.8x26.5	1	1
26	91108-I006-0000	Side Screw	1	1

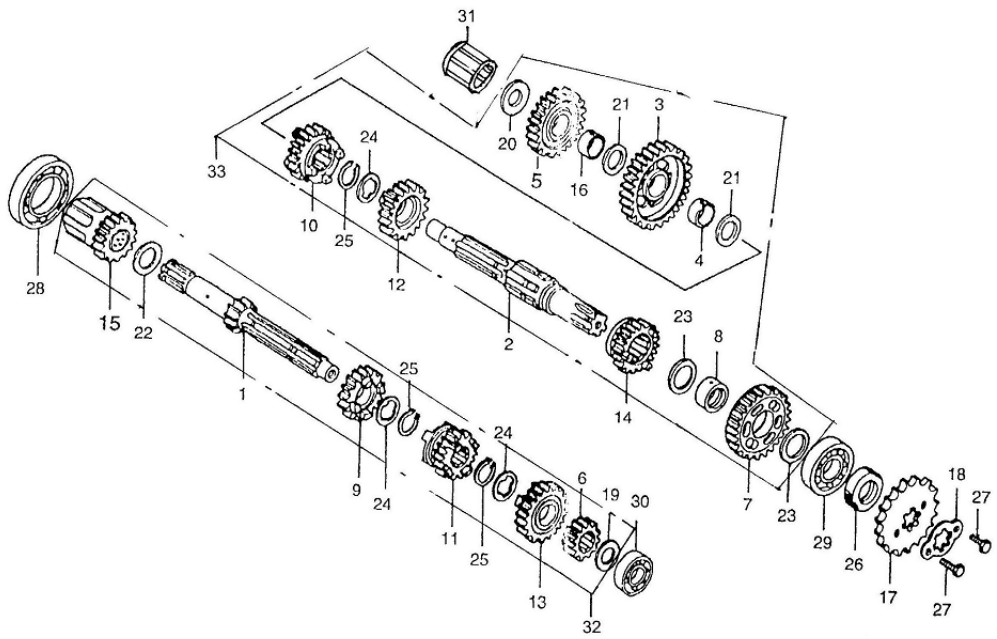

AJP	PARTS LIST	Ref[a]:	PL007EN
		Model:	PR4
	TRANSMISSION	Date:	October 2009
		Edition:	2nd

ITEM	REFERENCE	DESIGNATION	125	200
1	23221-I006-0000	Main Shaft (13T)	1	1
2	23241-I006-0000	Secondary Shaft	1	1
3	23242-I006-0001	1st Gear, Secondary Shaft (26T)	1	1
4	23203-I006-0001	Dowel Pin	1	1
5	23248-I006-0000	Secondary Starting Gear (28T)	1	1
6	23222-I006-0002	2nd Gear, Main Shaft (17T)	1	1
7	23242-I006-0002	2nd Gear, Secondary Shaft (32T)	1	1
8	23203-I006-0002	Dowel Pin 20x23x9	1	1
9	23222-I006-0003	3rd Gear, Main Shaft (20T)	1	1
10	23242-I006-0003	3rd Gear, Secondary Shaft (28T)	1	1
11	23222-I006-0004	4rd Gear, Main Shaft(23T)	1	1
12	23242-I006-0004	4rd Gear, Secondary Shaft (26T)	1	1
13	23222-I006-0005	5th Gear, Main Shaft (25T)	1	1
14	23242-I006-0005	5th Gear, Secondary Shaft (24T)	1	1
15	23231-I006-0000	Main Starter Gear (18T)	1	1
16	23203-I006-0003	Dowel Pin	1	1
17	00MTS01A0035	Drive Sprocket (13T)	1	1
17	00MTS01A0036	Drive Sprocket (14T)	1	1
17	23401-I006-0000	Drive Sprocket (15T)	1	1
17	00MTS01A0018	Drive Sprocket (16T)	1	1
18	23402-I006-0000	Sprocket Fixing Plate	1	1
19	93301-Z1501024000	Washer 15 mm	2	2
21	93301-E1650524000	Washer 16.5 mm	2	2
22	93301-E2000527000	Washer A20 mm	1	1
23	93301-E2001027000	Washer 20 mm	2	2
24	23223-I006-0000	Washer 20 mm	3	3
25	B008930120000000	Cir-Clip	3	3
26	90303-I006-0000	Seal 20x34x7	1	1
27	B05783000600107	Bolt M6x10	2	2
28	92102-00000006006	Bearing 6006	1	1
29	92102-00000006204	Bearing 6204	1	1
30	92102-00000006202Z	Bearing 6202Z	1	1
31	92102-000HK152312	Bearing NK152315	1	1
32	23220-I006-0000	Main Shaft Assembly	1	1
33	23240-I006-0000	Secondary Shaft Assembly	1	1

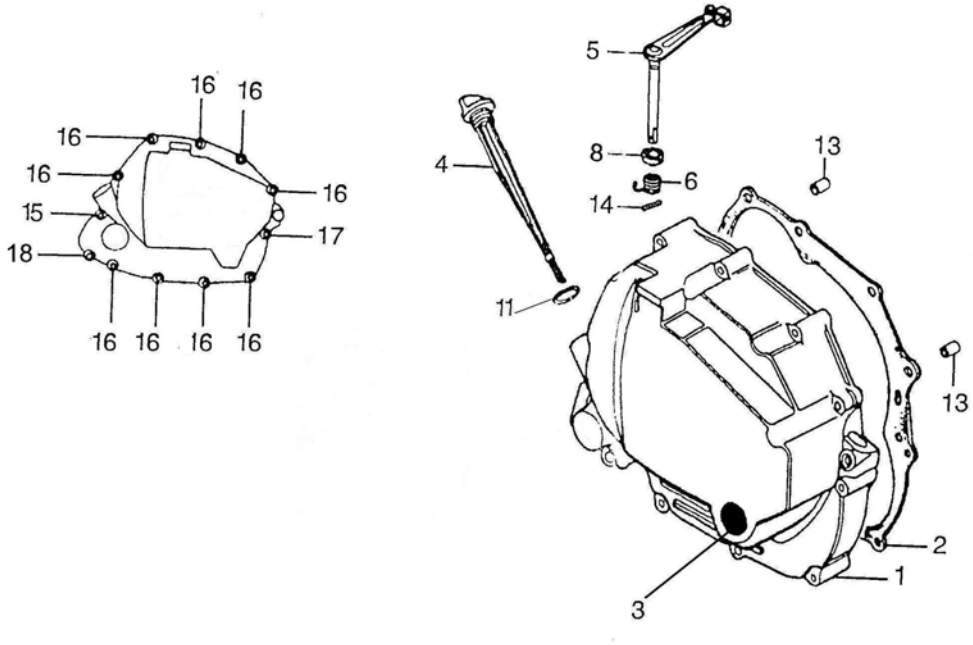

AJP	PARTS LIST	Ref[a]:	PL008EN
		Model:	PR4
	RIGHT CRANKCASE COVER	Date:	October 2009
		Edition:	2nd

ITEM	REFERENCE	DESIGNATION	125	200
1	12421-5049-0AJP	Right Crankcase Cover	1	0
1	12421-I006-0AJP	Right Crankcase Cover	0	1
2	90206-I006-0000	Right Crankcase Cover Gasket	1	1
3	12426-I008-0000	Oil Level View-Finder	1	1
4	14301-I006-0000	Oil Level Gauge	1	1
5	2242A-I006-0000	Clutch Lever	1	1
6	22427-I006-0000	Clutch Lever Spring	1	1
8	90306-I006-0000	O-Ring 12x22x5	1	1
11	90106-D002-0000	O-Ring Vareta Nível 18x3	1	1
13	91502-D002-0000	Dowel Pin 8x14	2	2
14	XA001-0000-0000	Cotter Pin 3x12	1	1
15	S7016-0000-0000	Bolt M6x35	1	1
16	S7017-0000-0000	Bolt M6x40	9	9
17	S7019-0000-0000	Bolt M6x50	1	1
18	S7014-0000-0000	Bolt M6x25	1	1

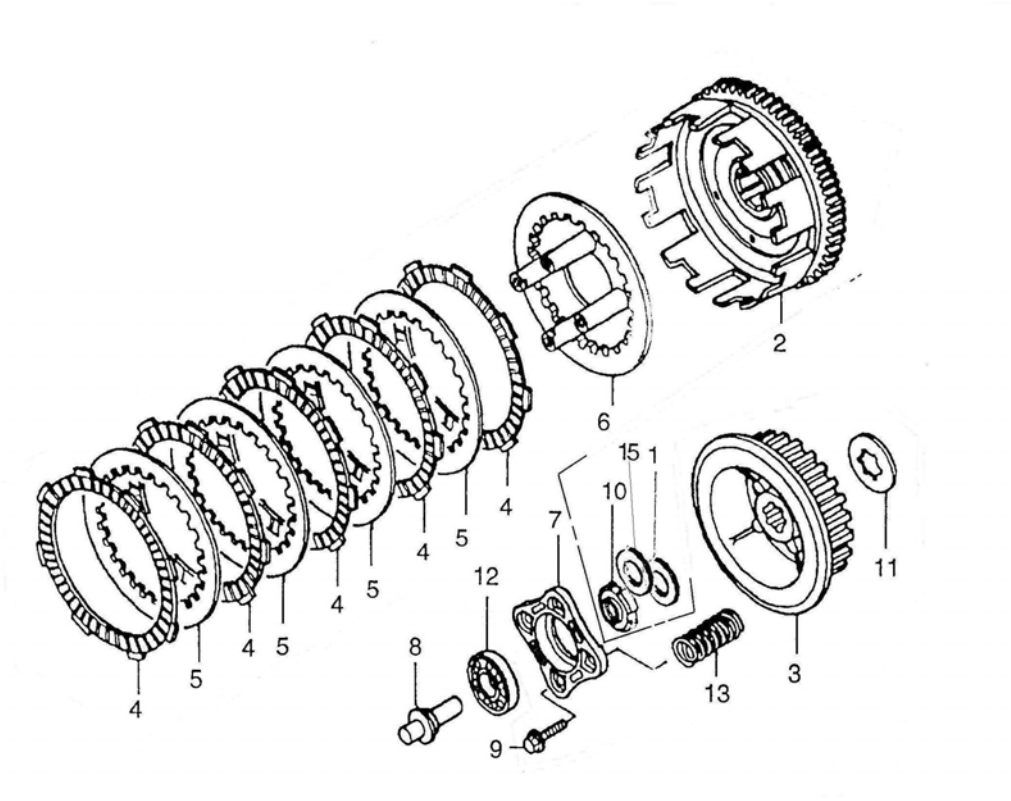

AJP	PARTS LIST	Ref[a]:	PL009EN
		Model:	PR4
	CLUTCH	Date:	October 2009
		Edition:	2nd

ITEM	REFERENCE	DESIGNATION	125	200
1	22001-L044-0000	Washer	1	1
2	22305-I006-0000	Primary Driven Gear (73T)	1	0
2	22150-L044-0000	Primary Driven Gear (70T)	0	1
3	22202-I006-0000	Hub, Cluch Sleeve	1	1
4	2223A-I006-0000	Drive Plate Clutch	5	5
5	22201-I006-0000	Driven Plate, Clutch	4	4
6	22105-I008-0000	Pressure Disc, Clutch	1	1
7	22203-I006-0000	End Plate, Clutch	1	1
8	22403-I006-0000	Push Rod, Clutch	1	1
9	91110-I006-0000	Flange Bolt	1	1
10	14206-I006-0000	Lock Nut	1	1
11	22205-I006-0000	Washer B, 20mm	1	1
12	Z0098-0000-0000	Bearing	1	1
13	22204-I006-0000	Clutch Spring	4	4
15	22004-I006-0000	Conic Washer	1	1

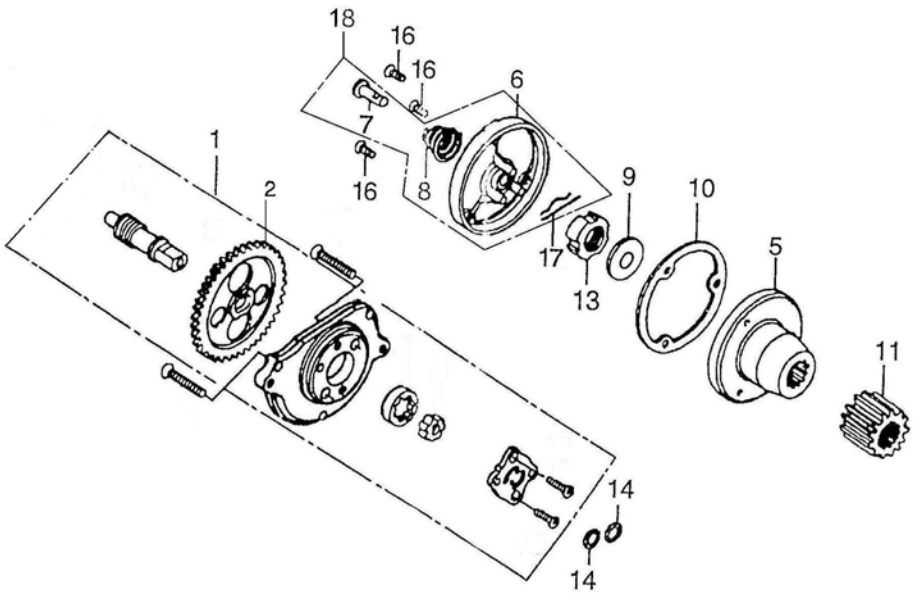

AJP	PARTS LIST	Ref[a]:	PL010EN
		Model:	PR4
	OIL PUMP	Date:	October 2009
		Edition:	2nd

ITEM	REFERENCE	DESIGNATION	125	200
1	14100-I006-0000	Oil Pump Assembly (39T)	1	0
1	14102-I044-0000	Oil Pump Assembly (37T)	0	1
2	14102-L044-0000	Oil Pump Drive Gear (39T)	1	0
2	14122-I006-0000	Oil Pump Drive Gear (37T)	0	1
5	1422A-I006-0000	Oil Filter Rotor	1	1
6	14201-I006-0000	Oil Filter Rotor Cap	1	1
7	14202-I006-0000	Oil Through	1	1
8	14203-I006-0000	Oil Through Spring	1	1
9	22004-I006-0000	Rotor Lock Washer	1	1
10	90208-I006-0000	Oil Filter Rotor Gasket	1	1
11	23101-I006-0000	Primary Drive Gear (18T)	1	0
11	23101-L044-0000	Primary Drive Gear (21T)	0	1
13	14206-I006-0000	Nut M16	1	1
14	90108-I006-0000	O-Ring 9.4x2.4	2	2
16	L6052-0000-0000	Bolt M5x12	3	3
17	91505-I006-0000	Cir-Clip 8mm	1	1
18	14210-I006-0000	Oil Filter Rotor Cap Assembly	1	1

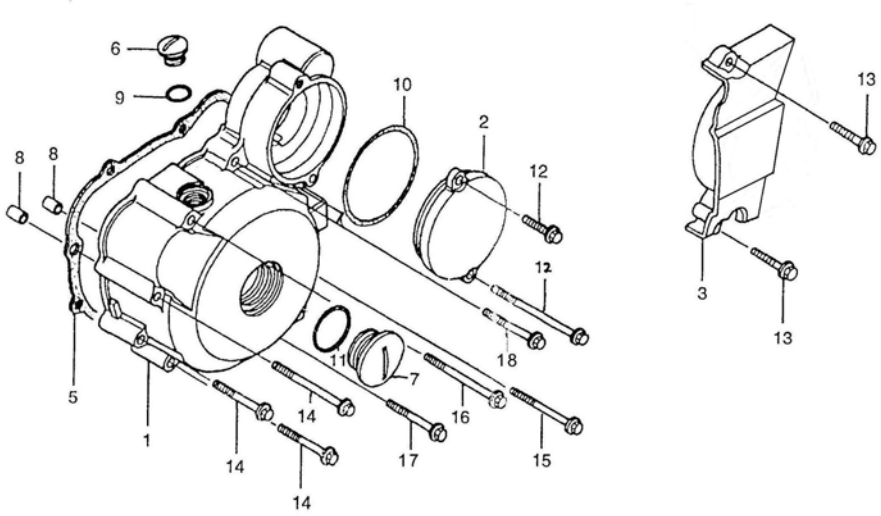

AJP	PARTS LIST		Ref[a]:	PL011EN
			Model:	PR4
	LEFT CRANKCASE COVER		Date:	October 2009
			Edition:	2nd
ITEM	REFERENCE	DESIGNATION	125	200
1	12301-I049-0AJP	Left Crankcase Cover	1	1
2	12308-I049-0AJP	Reduction Gear Cover	1	1
3	12302-I049-0AJP	Left Crankcase RR Cover	1	1
5	12001-I049-0000	Left Crankcase Cover Gasket	1	1
6	12303-G011-0AJP	Top Sight Hole Cap	1	1
7	12304-G011-0AJP	Sight Hole Cap	1	1
8	91502-I006-0000	Dowel Pin 8x14	1	1
9	12306-I006-0000	O-Ring 13.8x2.5	1	1
10	12309-I049-0000	O-Ring 63x3	1	1
11	12307-I006-0000	O-Ring 27.4x2.4	1	1
12	S7013-I006-0000	Bolt M6x20	2	2
13	S7014-0000-0000	Bolt M6x28	2	2
14	S7014-0000-0000	Bolt M6x25	3	3
15	S7010-0000-0000	Bolt M6x60	1	1
16	S7016-0000-0000	Bolt M6x35	1	1
17	S7017-0000-0000	Bolt M6x40	1	1
18	S7064-0000-0000	Bolt M6x75	2	2

AJP	PARTS LIST	Ref[a]:	PL012EN
		Model:	PR4
	GENERATOR	Date:	October 2009
		Edition:	2nd

ITEM	REFERENCE	DESIGNATION	125	200
1	82130-I044-0000	Fly Wheel Assembly	1	1
2	82105-0000-0000	Pulse Generator	1	1
3	82101-I049-0AJP	Fly Wheel	1	1
4	82120-L044-0000	Stator	1	1
5	L3042-0000-0000	Bolt M4x12	2	2
6	S7014-0000-0000	Bolt M6x25	2	2
7	91106-I006-0000	Hex Bolt M8x33	1	1
8	91313-I006-0000	Washer 8x24	1	1
9	L0060-0000-0000	Bolt M6x16	1	1

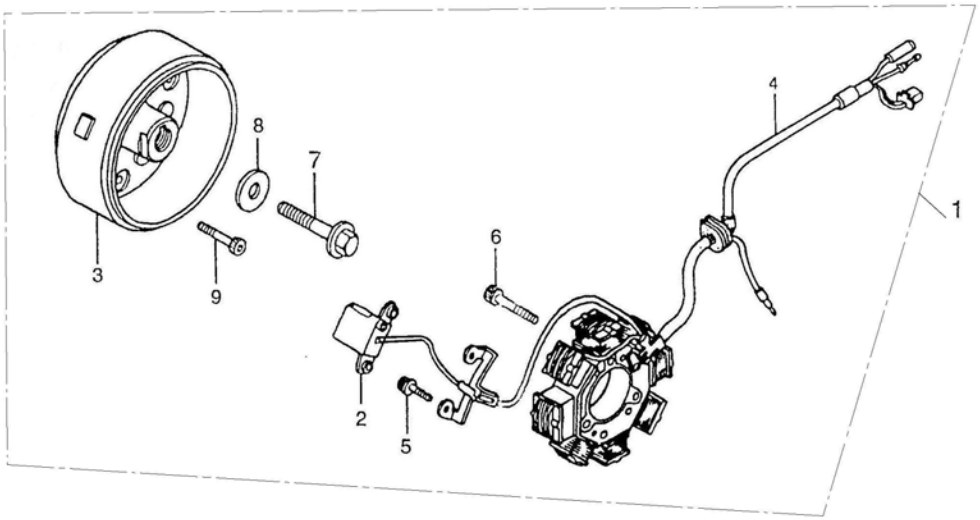

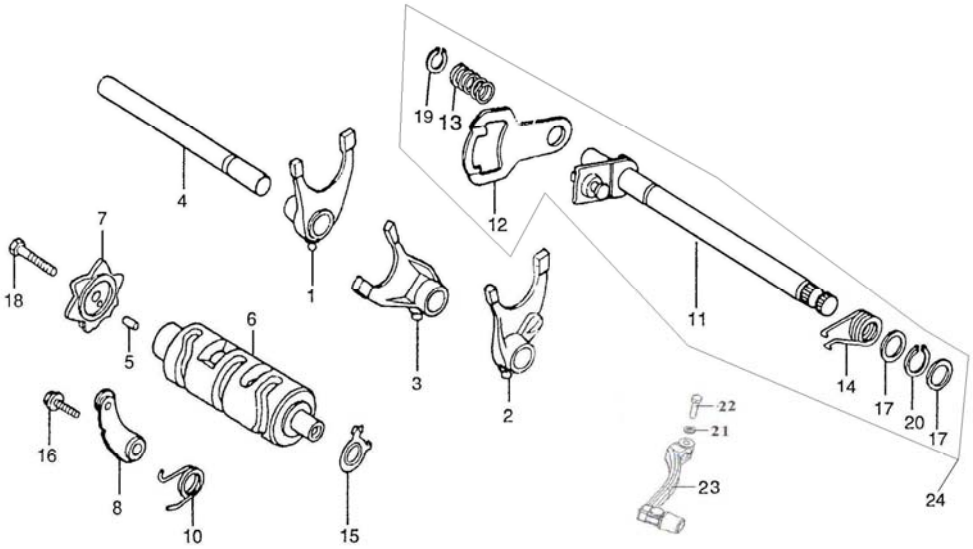

AJP	PARTS LIST		Ref[a]:	PL013EN
			Model:	PR4
	GEARSHIFT DRUM / SPINDLE		Date:	October 2009
			Edition:	2nd
ITEM	REFERENCE	DESIGNATION	125	200
1	24101-I006-0000	Right Gear Shift Fork	1	1
2	24102-I006-0000	Left Gear Shift Fork	1	1
3	24103-I006-0000	Central Gear Shift Fork	1	1
4	24104-I006-0000	Gear Shift Fork Guide	1	1
5	X3062-0000-0000	Dowel Pin 4x10	1	1
6	24201-I006-0000	Gear Shift Drum	1	1
7	24202-I006-0000	Gear Shift Cam	1	1
8	24221-I006-0000	Gear Shift Drum Stoper	1	1
10	24302-I006-0000	Gear Drum Stopper Spring	1	1
11	2432A-I006-0000	Gear Shift Spindle	1	1
12	24301-I006-0000	Gear Shift Plate	1	1
13	24302-I006-0000	Gear Shift Plate Spring	1	1
14	24303-I006-0000	Gear Shift Return Spring	1	1
15	88002-I006-0000	Neutral Switch Rotor	1	1
16	S7060-0000-0000	Bolt M6x22	1	1
17	24304-I006-0000	Washer 14mm	2	2
18	S3031-0000-0000	Bolt M6x25	1	1
19	D2003-0000-0000	Cir-Clip 12mm	1	1
20	D2005-0000-0000	Cir-Clip 14mm	1	1
21	AN0125006000	Washer DIN127 M6	1	1
22	PC0933006025	Screw DIN 933 M6x25	1	1
23	00MTS01B0016	Gear Selector PR3	1	1
24	24300-I006-0000	Gear Shift Spindle Assembly	1	1

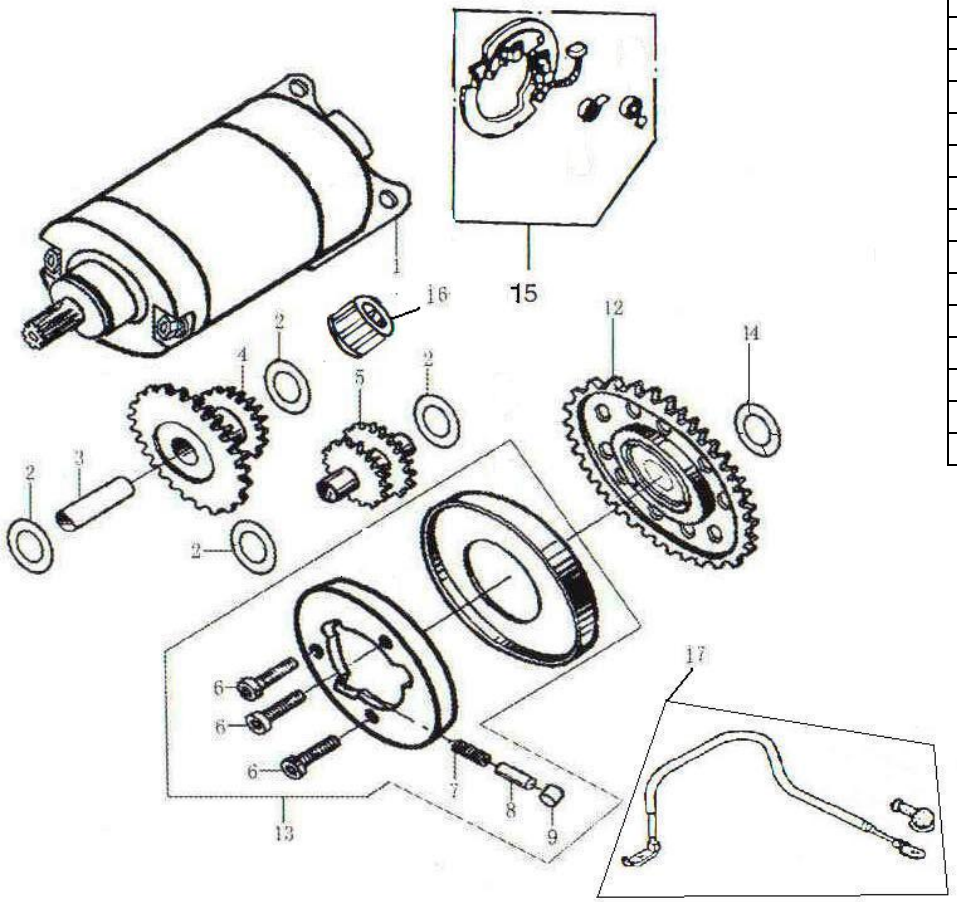

AJP	PARTS LIST	Ref[a]:	PL014EN
		Model:	PR4
	STARTING MOTOR	Date:	October 2009
		Edition:	2nd

ITEM	REFERENCE	DESIGNATION	125	200
1	82200-I049-0AJP	Starting Motor	1	1
2	93301510505180000	Washer 10.5x0.5x18	4	4
3	21402-I049-0000	Starter Reduction Gear Spacer	1	1
4	21421-I049-0000	Starter Reduction Gear 61/21	1	1
5	21401-I049-0000	Stator Gear 15/16	1	1
6	B0070010800187	Bolt M8x18	3	3
7	21303-I049-0000	Clutch Spring	3	3
8	21305-I049-0000	Spring Cap	3	3
9	21304-I049-0000	Roll 10.2x11.6	3	3
12	2142A-I049-0000	Starter Drive Gear	1	1
13	21300-I049-0000	Starter Drive Gear Assembly	1	1
14	21421-I049-0000	Starting Motor Washer 20x32x3.5	1	1
15	82228-I049-0000	Brush	1	1
16	Z3039-0000-0000	Bearing HK 1010	4	4
17	82231-I049-0000	Starting Motor Cable	1	1

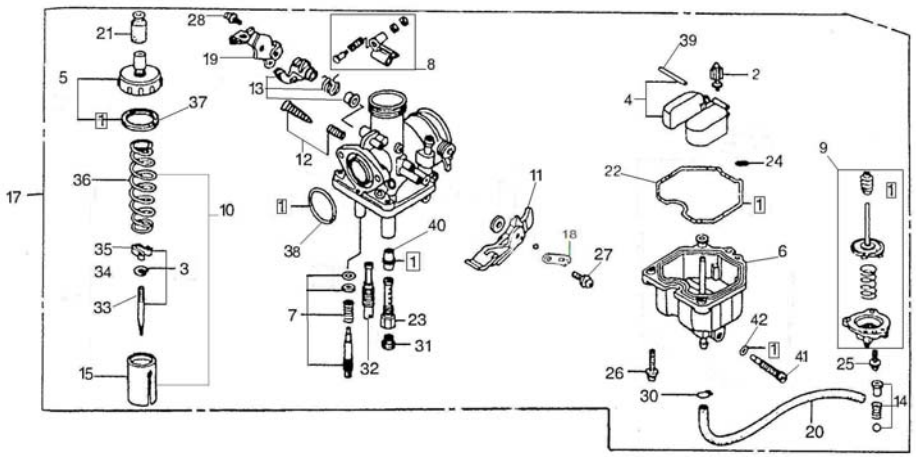

AJP	PARTS LIST	Ref[a]:	PL015EN
		Model:	PR4
	CARBURETTOR	Date:	October 2009
		Edition:	2nd

ITEM	REFERENCE	DESIGNATION	125	200
1	17101-I006-0000	Gasket Set	1	1
2	17102-I006-0000	Conic Valve	1	1
3	17103-I006-0000	Needle with Cir-Clip	1	0
4	17104-I006-0000	Float	1	1
5	17105-I006-0000	Piston Cap	1	0
5	17102-L044-0000	Piston Cap	0	1
6	17106-I006-0000	Float Chamber	1	0
6	17140-L044-0000	Float Chamber	0	1
7	17107-I006-0000	Adjusting Screw Set	1	1
8	17108-I006-0000	Pump Arm	1	1
9	17109-I006-0000	Power Jet	1	1
10	17111-I006-0000	Throttle Valve	1	0
11	17112-I006-0000	Choke Cable Bracket	1	1
12	17113-I006-0000	Adjusting Screw	1	1
13	17108-I006-0000	Pump Arm	1	1
14	17115-I006-0000	Check Valve	1	1
15	17105-L044-0000	Carburettor Piston	0	1
17	171100-0000-0003	Carburettor PZ30	0	1
18	17118-I006-0000	Choke Plate	1	1
19	17119-I006-0000	Link Plate, Pump Arm	1	1
20	17121-I006-0000	Fuel Tube	1	1
21	17122-I006-0000	Dust Cap	1	1
22	17123-I006-0000	Float Chamber Gasket	1	1
23	17124-I006-0000	Main Nozzle	1	0
23	171A2-L044-0000	Main Nozzle	0	1
24	S-1305-20035-00	O-Ring 3.5x2	1	0
24	S-1305-16045-00	O-Ring 4.5x1.6	0	1
25	L3042-0000-0000	Screw	3	3
26	L3043-0000-0000	Screw M4x16mm	3	3
27	L3052-0000-0000	Screw 5x12	1	1
28	L3094-0000-0000	Screw 5x14	1	1
30	17129-0000-0000	Tube Clip	1	1
31	17126-0000-0000	Main Jet #120	1	0
31	17118-L044-0000	Main Jet #130	0	1
32	17127-0000-0000	Idle Jet #50	1	0
32	91A093720000	Idle Jet #50	0	1
33	17156-L044-0000	Needle	0	1
34	17106-L044-0000	Needle Cir-Clip	0	1
35	17104-L044-0000	V-Clip	0	1
36	17165-L044-0000	Air Throttle Return Spring	0	1
37	17147-L044-0000	Top Cap Gasket	0	1
38	91A-09439-00-00	O-Ring 30x2.5	1	0
38	90101-10300000150	O-Ring 34x2.5	0	1
39	17144-L044-0000	Float Pin	1	1
40	17151-L044-0000	Main Jet	1	1
41	171A5-L044-0000	Drain Screw	1	1
42	90101-10045000100	O-Ring Drain Screw 4.5x1	1	1

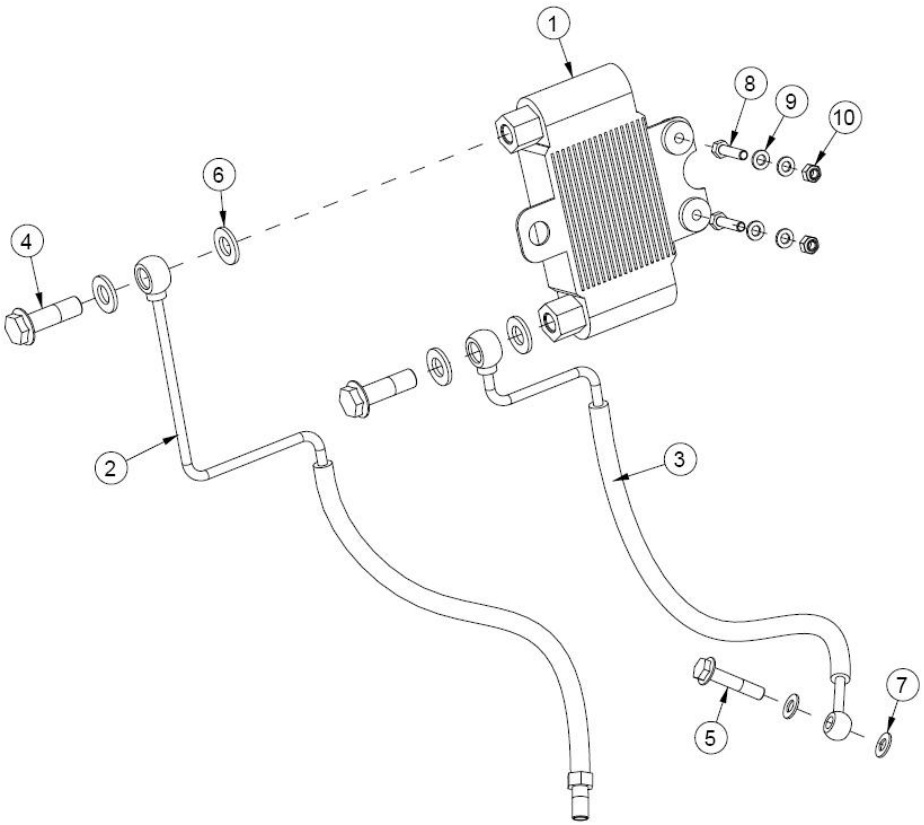

AJP	PARTS LIST		Ref[a]:	PL016EN
			Model:	PR4
	OIL COOLER		Date:	October 2009
			Edition:	2nd
ITEM	REFERENCE	DESIGNATION	125	200
1	19300-L0044-0AJP	Oil Cooler	-	1
2	00MTS01A0032	Oil Cooler Long Tube Pr3	-	1
3	00MTS01A0031	Oil Cooler Short Tube PR3	-	1
4	91107-I006-0AJP	Screw M12x1.25	-	2
5	91107-I006-0000	Screw M8x1	-	1
6	93301-80821014AJP	Sealing Washer 14x20x1.5	-	4
7	93301-80821014000	Sealing Washer 8x14x1	-	2
8	PF0933006025	Screw Din933 M6x25	-	2
9	AN0125006000	Washer Din125 M6	-	2
10	PC0985006000	Nut Din985 M6	-	2

AJP	PARTS LIST	Ref[a]:	PL017EN
		Modell:	PR4
	AIR FILTER	Date:	October 2009
		Edition:	2nd

Item	REFERENCE	DESCRIPTION	Qt.
1	PF0912006090	Screw Din912 M6x90	1
2	AN9021006000	Washer Din9021 M6	1
3	00MTS01A0034	Air Filter Cap	1
4	00MTS01A0004	Air Filter	1
5	00MTS01A0005	Air Filter Bracket	1
8	00MTC01A0028	Air Filter Box	1
9	00DES01A0018	Clamp 32-50	2
10	00MTS01A0027	Intake Hose	1

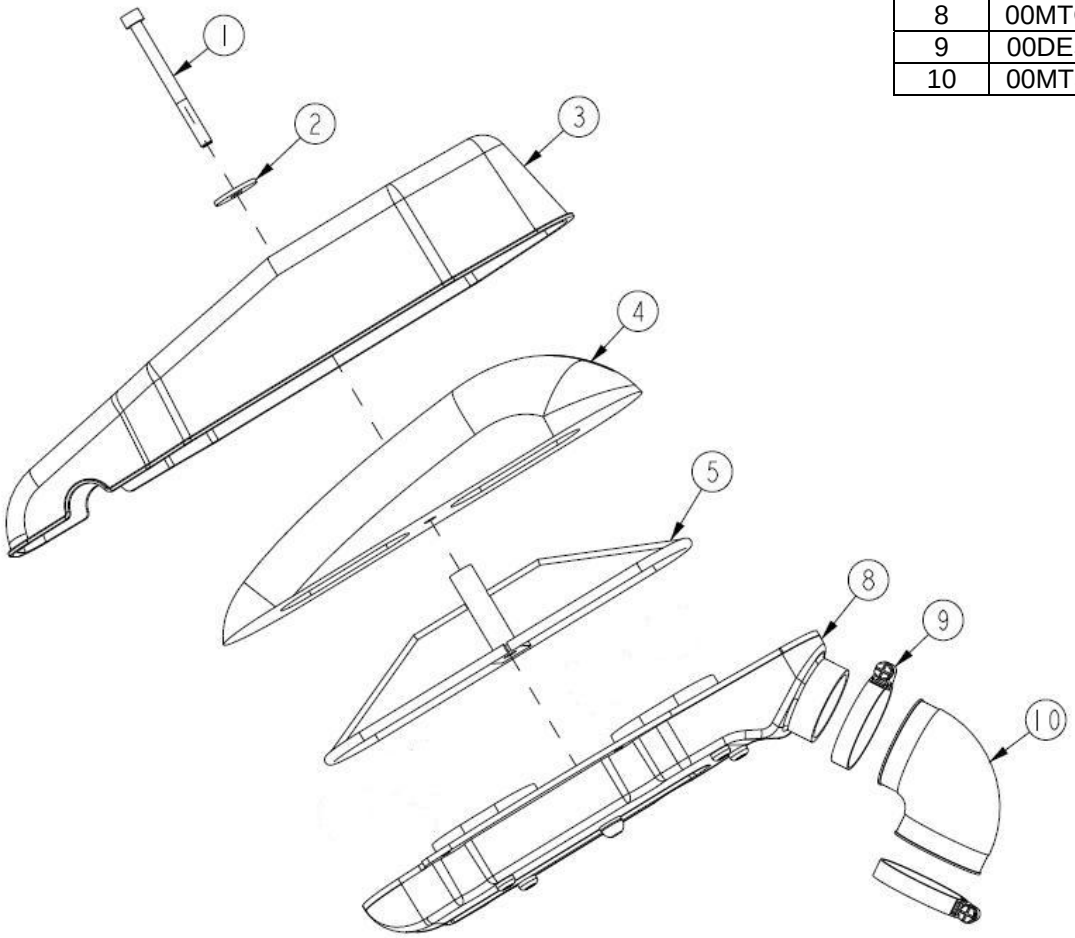

AJP	PARTS LIST	Ref[a]:	PL018EN
		Model:	PR4
	MUFFLER MX	Date:	October 2009
		Edition:	2nd

Item	REFERENCE	DESCRIPTION	Qt.
1	00MTS03A0026	Exhaust Muffler Mx	1
2	00MTS01A0010	Exhaust Muffler End	1
3	PC0985006000	Nut Din985 M6	1
4	00MTS07A0008	Spacer 22x11x6	1
5	AN9021006000	Washer Din9021 M6	1
6	PF0912006025	Screw Din912 M6x25	1
7	00MTS01A0024	Holder ND30	1
8	AN0125006000	Washer Din125 M6	1
9	PF0933006016	Screw Din933 M6x16	1
10	00MTS06A0025	Exhaust Pipe	1
11	00MTS01A0001	Exhaust Pipe Gasket	1
12	AN0127006000	Washer Din127 M6	2
13	PF0933006025	Screw Din933 M6x25	1
14	PC098006000	Nut Din980 M6	1

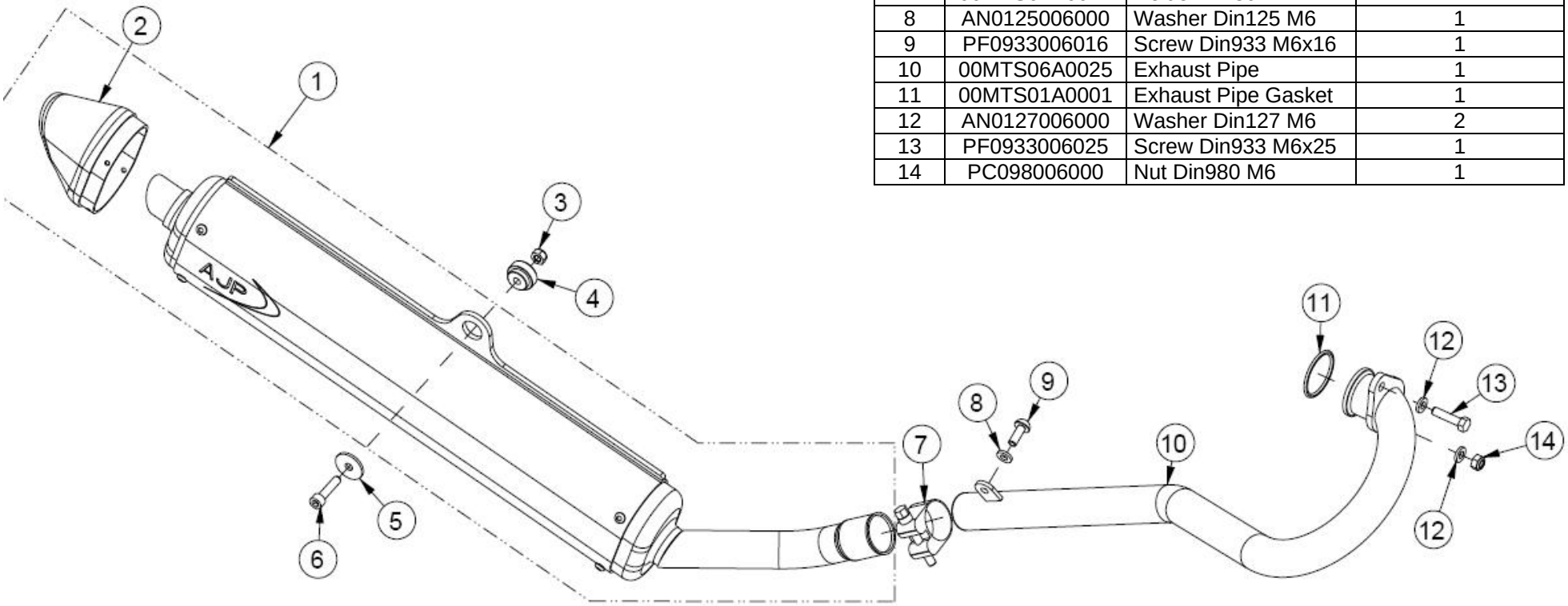

AJP	PARTS LIST	Ref[a]:	PL019EN
		Model:	PR4
	MUFFLER	Date:	October 2009
		Edition:	2nd

Item	REFERENCE	DESCRIPTION	Qt.
1	00MTS04A0030	Exhaust Muffler	1
2	00MTS06A0031	Exhaust Muffler Protection	1
3	PF7985006012	Screw Din 7985 M6x12	2
4	AN0125006000	Washer Din125 M6	2
5	PF0912006025	Screw Din912 M6x25	1
6	AN9021006000	Washer Din9021 M6	1
7	PC0985006000	Nut Din985 M6	1
8	00MTS01A0024	Holder ND30	1
9	PF0933006016	Screw Din933 M6x16	1
10	AN0125006000	Washer Din125 M6	1
11	00MTS06A0033	Exhaust Pipe	1
12	00MTS01A0001	Exhaust Pipe Gasket	1
13	AN0127008000	Washer Din127 M8	2
14	PF0933008025	Screw Din933 M8x25	1
15	PC098008000	Nut Din980 M8	1
16	00MTS06A0037	Exhaust Pipe Protection	1
17	PF0738006008	Screw ISO7380 M6x8	2

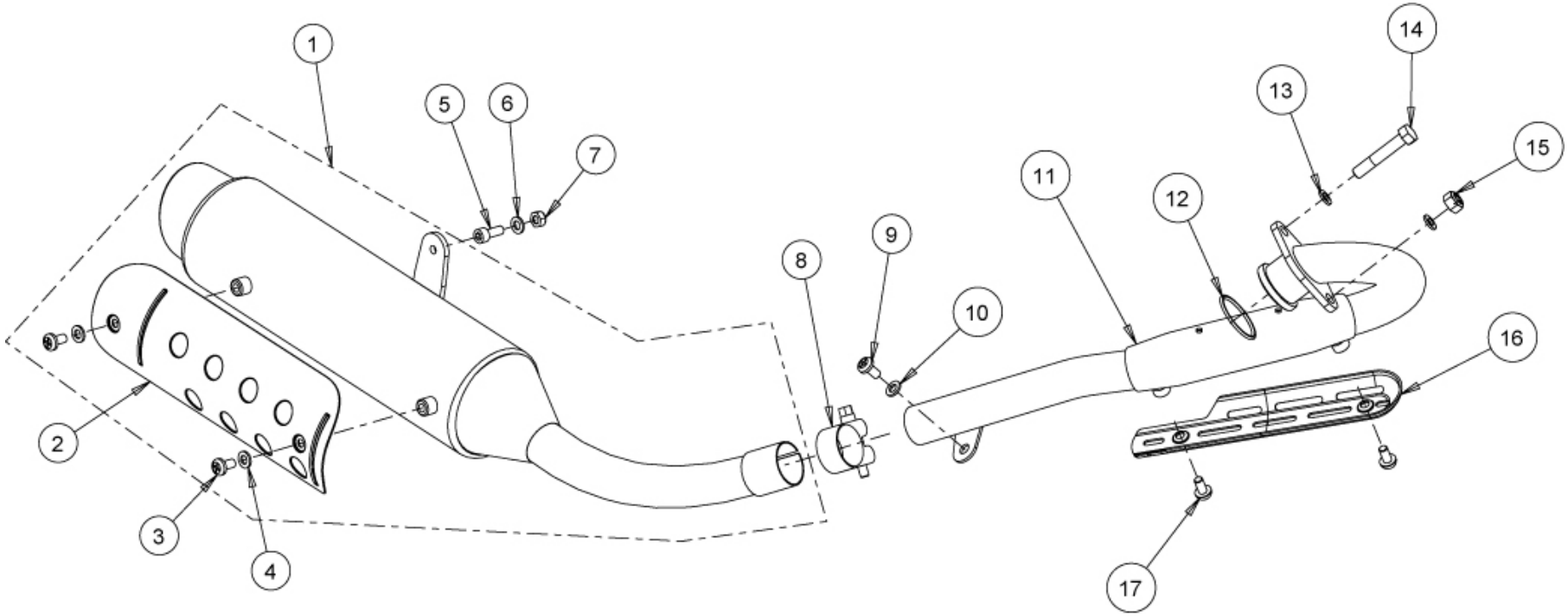

AJP	PARTS LIST	Ref[a]:	PL020EN
		Model:	PR4
	REAR SWING ARM	Date:	October 2009
		Edition:	2nd

Item	REFERENCE	DESCRIPTION	Qt.
1	00STS07A0027	Pivot Shaft	1
2	AN0125015000	Washer Din125 M15	2
3	00STS01A0003	Washer 40x20x3	2
4	RL00HK2016RS	Bearing HK2016 RS	4
5	00STS01A0002	Spacer 15x20x40	2
6	00STS01A0004	Plug	2
7	00STS01A0071	Rear Swing Arm	1
8	PC0934008000	Nut Din934 M8	2
9	PF0933008035	Screw Din933 M8x35	2
10	00STS01B0007	Chain Guide	1
11	PF0912006035	Screw Din912 M6x35	2
12	PC0934014000	Nut Din934 M14	1
13	PF7991006010	Screw Din7991 M6x10	1
14	00PLS01A0049	Chain Touch Defense Buffer	1
15	00PLS07A0029	Washer	1
16	PF7380006012	Screw Din738 M6x12	1

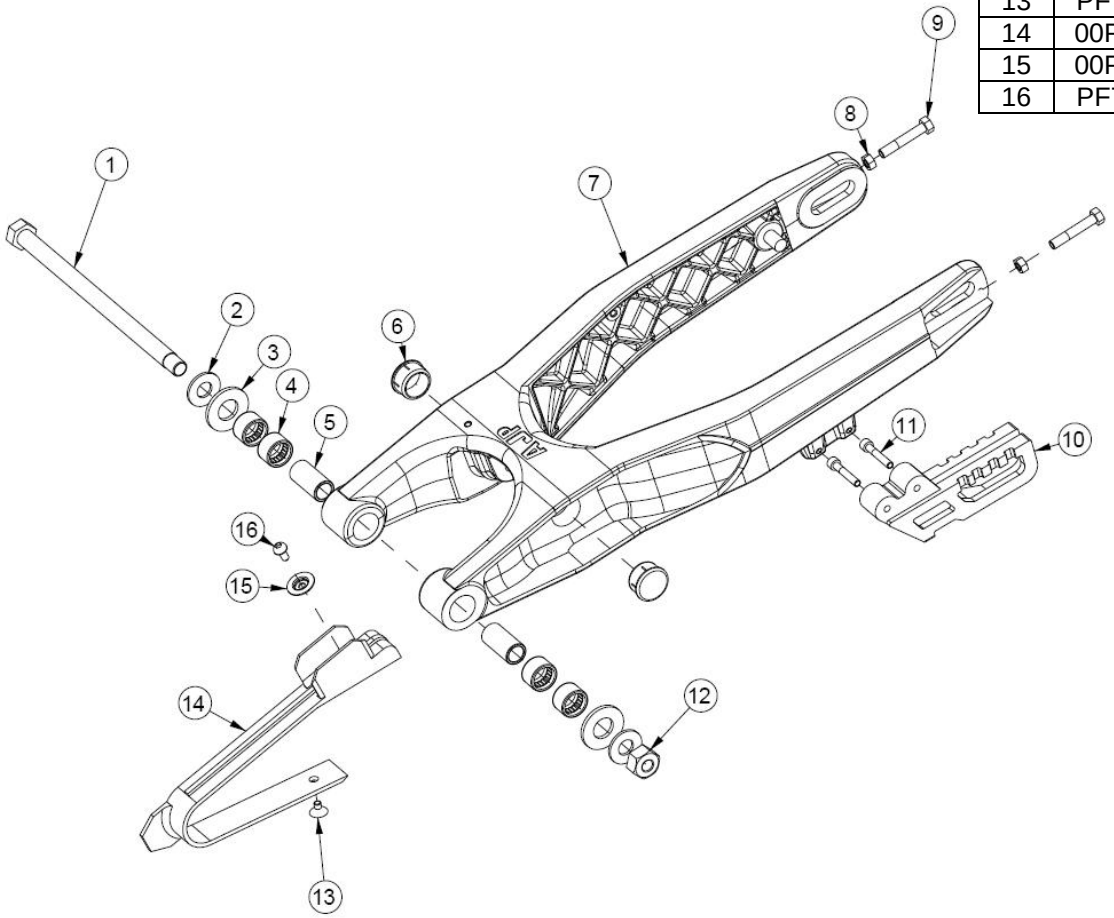

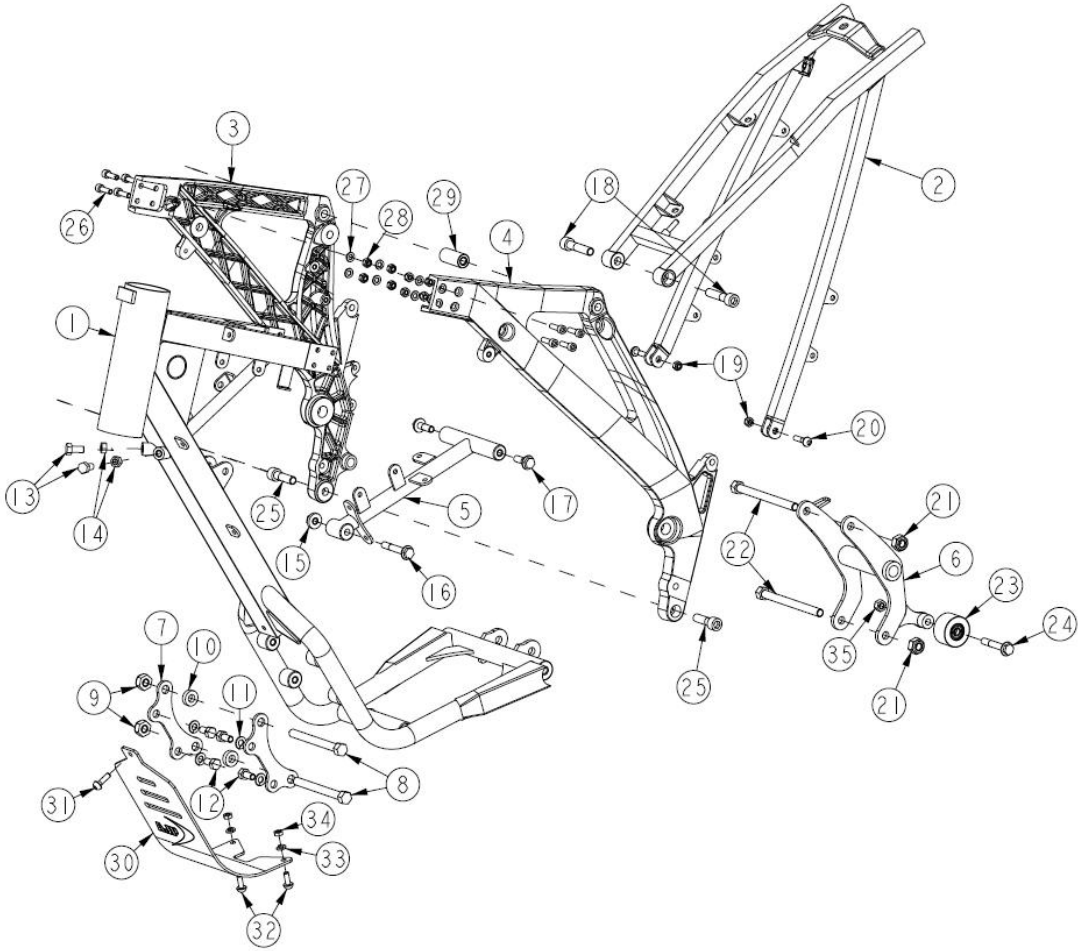

AJP	PARTS LIST	Ref[a]:	PL021EN
		Model:	PR4
	FRAME	Date:	October 2009
		Edition:	2nd

Item	REFERENCE	DESCRIPTION	Qt.
1	00QUS04A0042	Frame	1
2	00QUS06A0039	Rear frame	1
3	00QUS01A0026	Frame Beam RH	1
4	00QUS01A0025	Frame Beam LH	1
5	00QUS04A0027	Frame Reinforcement	1
6	00QUS07B0021	Rear Engine Mount	1
7	00QUS07A0020	Front Engine Mount	2
8	PF0UNC038100	Screw UNC 3/8x100	2
9	PC0UNC038000	Nut UNC 3/8	2
10	00QUS07A0009	Spacer 20x6.5x10	2
11	AN0127008000	Washer Din 127 M8	4
12	PF0933008016	Screw Din933 M8x16	4
13	PF0933008020	Screw Din933 M8x20	2
14	PC0934008000	Nut Din934 M8	2
15	PC6923008000	Nut Din6923 M8	1
16	PF6921008050	Screw Din6921 M8x50	1
17	PF6921008025	Screw Din6921 M8x25	2
18	PF0912010045	Screw Din912 M10x45	2
19	PC0985008000	Nut Din985 M8	2
20	PF7380008025	Screw Din738 M8x25	2
21	PC098201000	Nut Din982 M10	2
22	PF0931010120	Screw Din931 M10x120	2
23	00QUS01A0022	Bearing Nylon Roller	1
24	PF6921008050	Screw Din6921 M8x50	1
25	PF0912010035	Screw Din912 M10x35	2
26	PF7380006020	Screw Din738 M6x20	8
27	AN0125006000	Washer Din125 M6	8
28	PC0985006000	Nut Din985 M6	8
29	00QUS07A0029	Spacer	1
30	00QUS03A0036	Frame Cover	-
31	PF0738006020	Screw Din738 M6x20	-
32	PF0738006016	Screw Din738 M6x16	-
33	AN0125006000	Washer Din125 M6	-
34	PC0985006000	Nut Din985 M6	-
35	PC0985008000	Nut Din985 M8	1

AJP	PARTS LIST	**Ref[a]:**	PL022EN
		Model:	PR4
	STAND / FOOTPEG	**Date:**	October 2009
		Edition:	2nd

Item	REFERENCE	DESCRIPTION	Qt.
1	00QUS03A0032	Front Footpeg RH	1
2	00QUS03A0031	Front Footpeg LH	1
3	00QUS04A0043	Side Stand EN	1
	00QUS04A0012	Side Stand SM	1
4	00QUS01A0014	Inner Spring	1
5	00QUS01A0013	Outer Spring	1
6	00QUS04A0016	Stud	1
7	00QUS01A0017	Spring Holder	1
8	PC0985012000	Nut Din985 M12	1
9	AN0127006000	Washer Din127 M6	1
10	PF0933006016	Screw Din933 M6x16	1
11	00QUS07A0038	Front Footpeg Holder/Stand LH	1
12	PF0931008045	Screw Din931 M8x45	2
13	00QUS07A0034	Front Footpeg Spring Spacer	2
14	00QUS07A0033	Front Footpeg Spring	2
15	00QUS07A0030	Front Footpeg Holder RH	1
16	PC0985008000	Nut Din985 M8	2
17	PF7991008030	Screw Din7991 M8x30	1
18	AN0125008000	Washer Din125 M8	2
19	PC0985008000	Nut Din985 M8	2
20	AN0125008000	Washer Din125 M8	4
21	00QUS01A0040	Rear Footpeg Assembly LH	1
22	00QUS01A0018	Rear Footpeg Assembly RH	1
23	PF0933008016	Screw Din933 M8x16	4
24	PF7991008035	Screw Din7991 M8x35	1

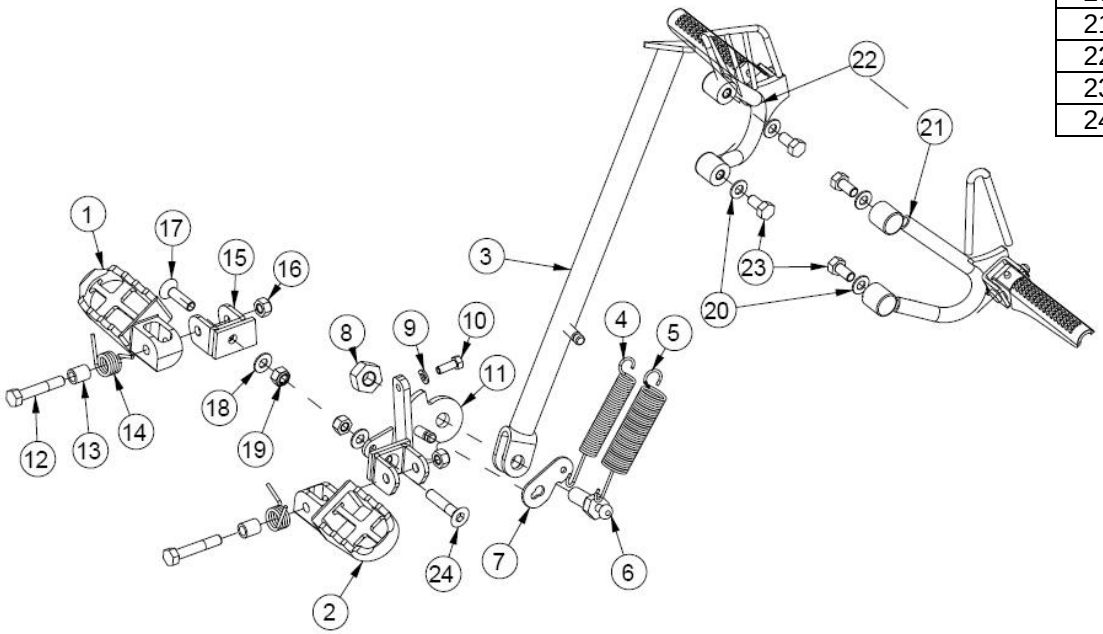

AJP	PARTS LIST	Ref[a]:	PL023EN
		Model:	PR4
	REAR BRAKE PEDAL	Date:	October 2009
		Edition:	2nd

Item	REFERENCE	DESCRIPTION	Qt.
1	00TRS07A0047	Rear Brake Pedal	1
2	00TRS06A0005	Push Rod	1
3	PF7380008035	Screw Din738 M8x35	1
4	AN0125008000	Washer Din125 M8	1
5	00TRS07A0048	Spacer	1
6	00TRS07A0049	Push Rod Washer	1
7	PC0985008000	Nut Din985 M8	2

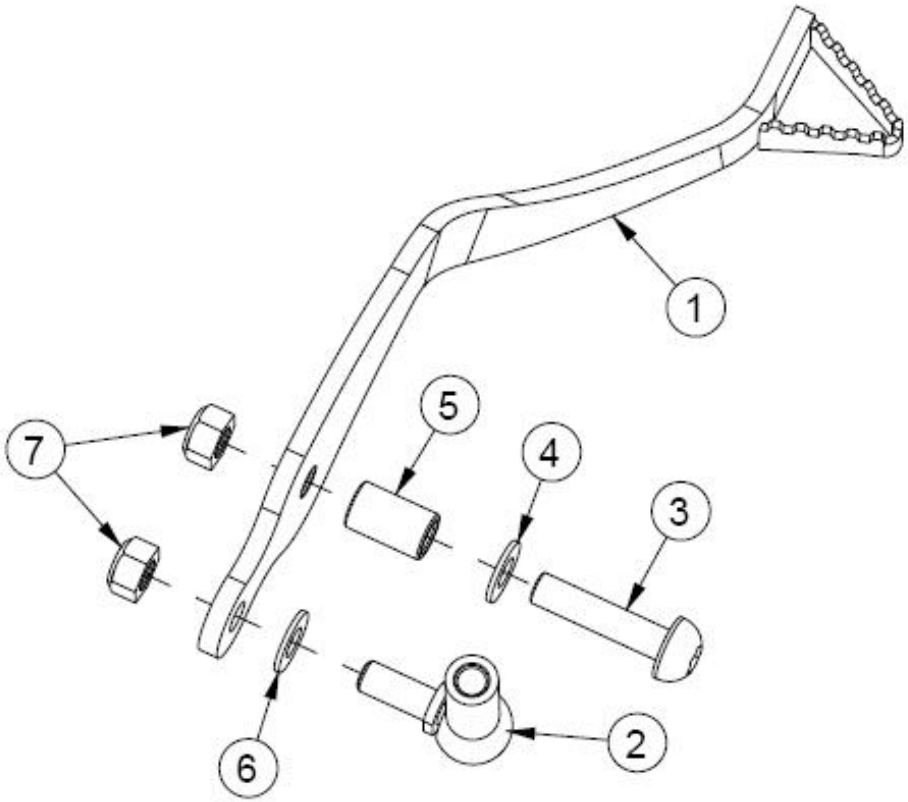

AJP	PARTS LIST	**Ref[a]:**	PL024EN
		Model:	PR4
	FUEL TANK	**Date:**	October 2009
		Edition:	2nd

Item	REFERENCE	DESCRIPTION	Qt.
1	00DES01A0023	Fuel Tank	1
2	00DES01A0006	Fuel Pump	1
3	00DES01A0007	Fuel Filter	1
4	00DES02A0027	Gas Cap	1
5	00DES01A0028	Gas Cap O-ring	1
6	00DES07A0025	Breather	1
7	00DES01A0026	Breather Gasket	2
8	PF7985005012	Screw Din7985 M5x12	4
9	AN0125006000	Washer Din125 M6	4
10	PF7380006012	Screw Din738 M6x12	4
11	00DES07A0024	Fuel Fishing Tube	1
12	00DES01A0008	Connector	1
13	00DES01A0019	Clamp 10mm	3
14	00DES01A0032	Fuel Tube 5x9x200	1
15	00DES01A0033	Fuel Tube 5x9x110	1
16	00DES01A0035	Fuel Tube 5x9x120	1
17	00DES01A0034	Fuel Tube 5x9x440	1
18	00DES01A0031	Fuel Tube 5x9x250	1
20	00DES01A0036	Fuel Tube 5x9x300	1

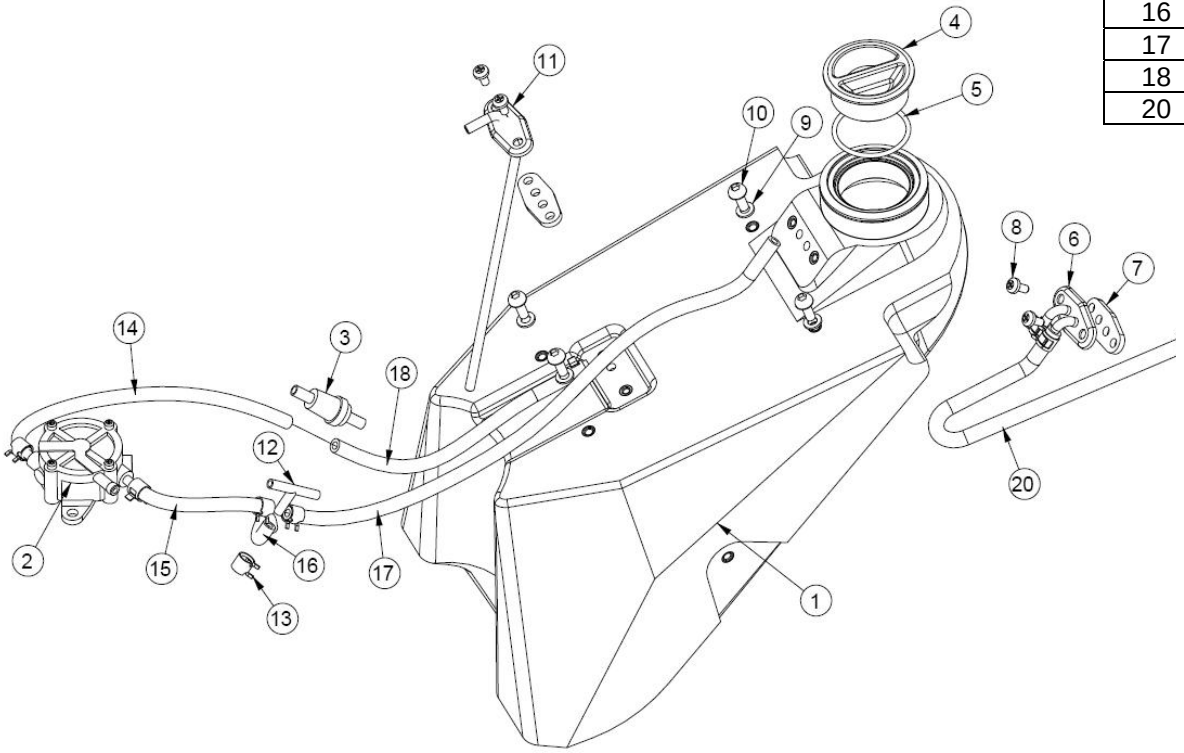

	PARTS LIST	Ref[a]:	PL025EN
		Model:	PR4
	FRAME COVER	Date:	October 2009
		Edition:	2nd

Item	REFERENCE	DESCRIPTION	Qt.
1	00PLS01A0053	Radiator Cover RH Black	1
	00PLS01A0067	Radiator Cover RH White	1
2	00PLS01A0054	Radiator Cover LH Black	1
	00PLS01A0068	Radiator Cover LH White	1
3	00PLS01A0055	Front Frame Cover RH.	1
4	00PLS01A0055	Front Frame Cover LH	1
5	00BAS01A0045	Radiator Cover Sticker LH	1
	00BAS01A0081	Radiator Cover Sticker LH 2010 Black	1
	00BAS01A0057	Radiator Cover Sticker LH 2010 White	1
6	00BAS01A0044	Radiator Cover Sticker RH	1
	00BAS01A0080	Radiator Cover Sticker RH 2010 Black	1
	00BAS01A0056	Radiator Cover Sticker RH 2010 White	1
7	PF7380006016	Screw Din738 M6x16	4
8	AN0125006000	Washer Din125 M6	6
9	PF7380006016	Screw Din 738 M6x16	6
10	PC0985006000	Nut Din985 M6	6
11	PF7380006020	Screw Din738 M6x20	2

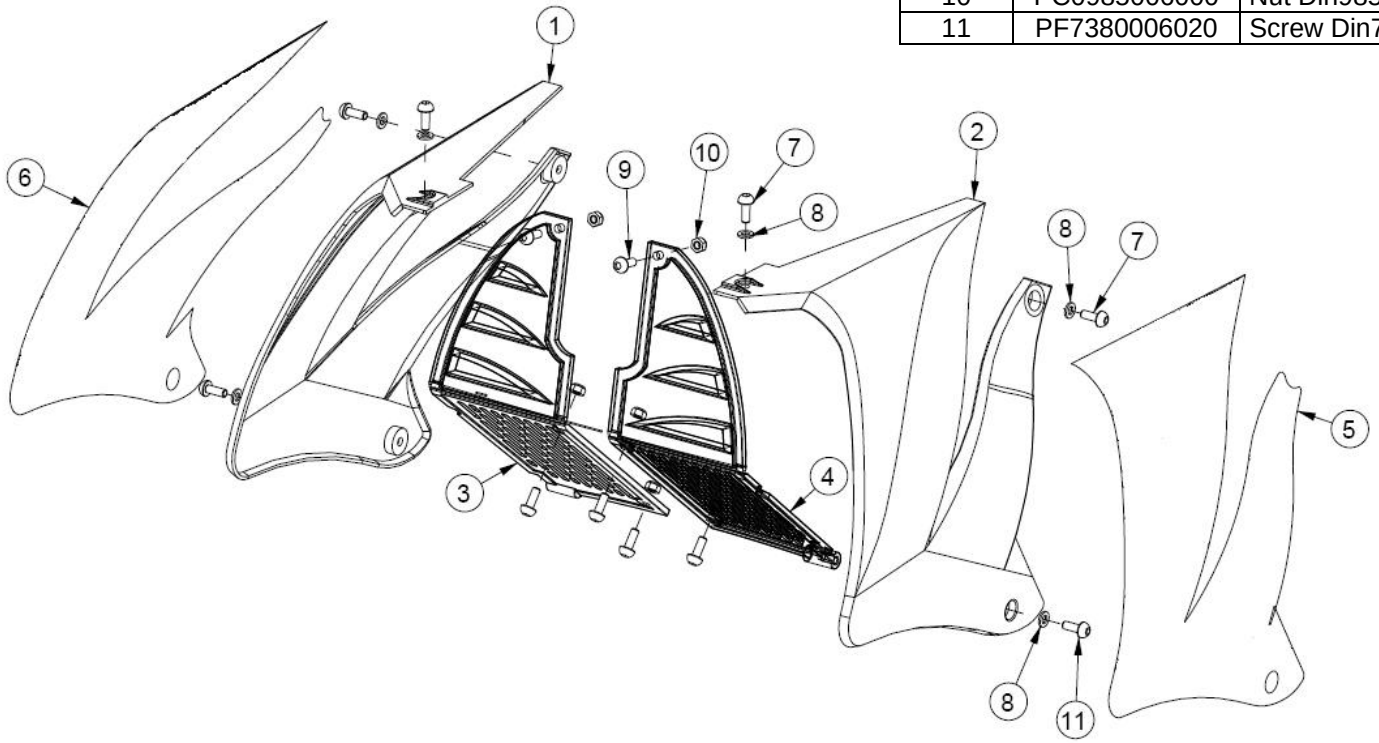

AJP	PARTS LIST	Ref[a]:	PL026EN
		Model:	PR4
	FRONT PLASTICS	Date:	October 2009
		Edition:	2nd

Item	REFERENCE	DESCRIPTION	QT
1	00PLS01A0048	Front Fender EN Black	1
	00PLS01A0070	Front Fender EN White	1
	00PLS01A0066	Front Fender SM Black	1
	00PLS01A0072	Front Fender SM White	1
2	00PLS01A0061	Headlamp Cover	1
3	00ELC01A0028	Headlamp	1
4	00PLS01A0007	Band	4
5	00PLS01A0005	Bulb 12V 35/35W	1
6	00PLS01A0006	Bulb 12V 5W	1
7	PF0912006020	Screw Din912 M6x20	4
8	AN9021006000	Washer Din9021 M6	8
9	00PLS01A0042	Holder	1
10	PF7981003513	Bolt 3.5	2
11	00PLC01A0060	Head Lamp Cover Assembly	1
12	00BAS01A0046	Sticker EN Black	1
	00BAS01A0049	Sticker EN White	1

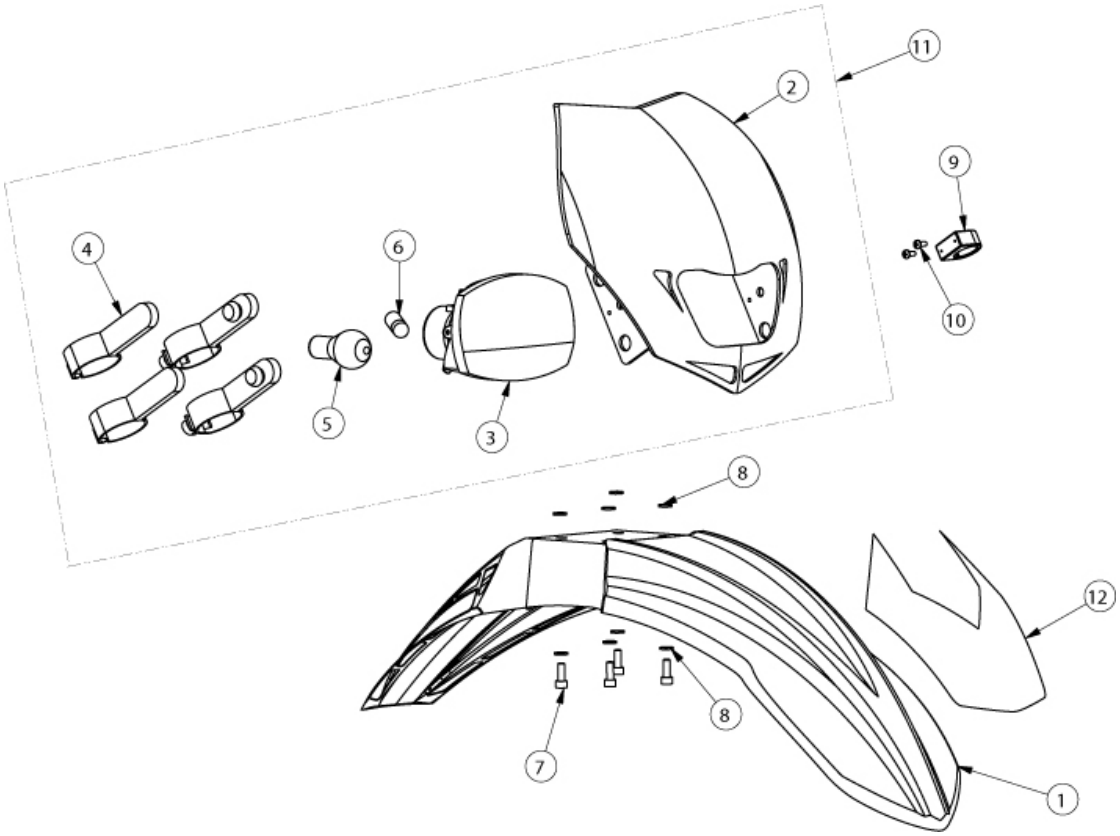

AJP	PARTS LIST	Ref[a]:	PL027EN
		Model:	PR4
	MAIN CONTROLS	Date:	October 2009
		Edition:	2nd

Item	REFERENCE	DESCRIPTION	Qt.
1	00COC01A0003	Set of Grips	1
2	00COS01A0003	Throtle tube	1
3	00COS01A0004	Insert	1
4	00COS01A0002	Clutch Lever	1
6	00ELC01A0003	Lights Switch	1
7	00COC01A0002	Throtle Control Assembly	1
8	00COC01A0001	Clutch Lever Assembly	1
9	00COS01A0029	Starting Button	1

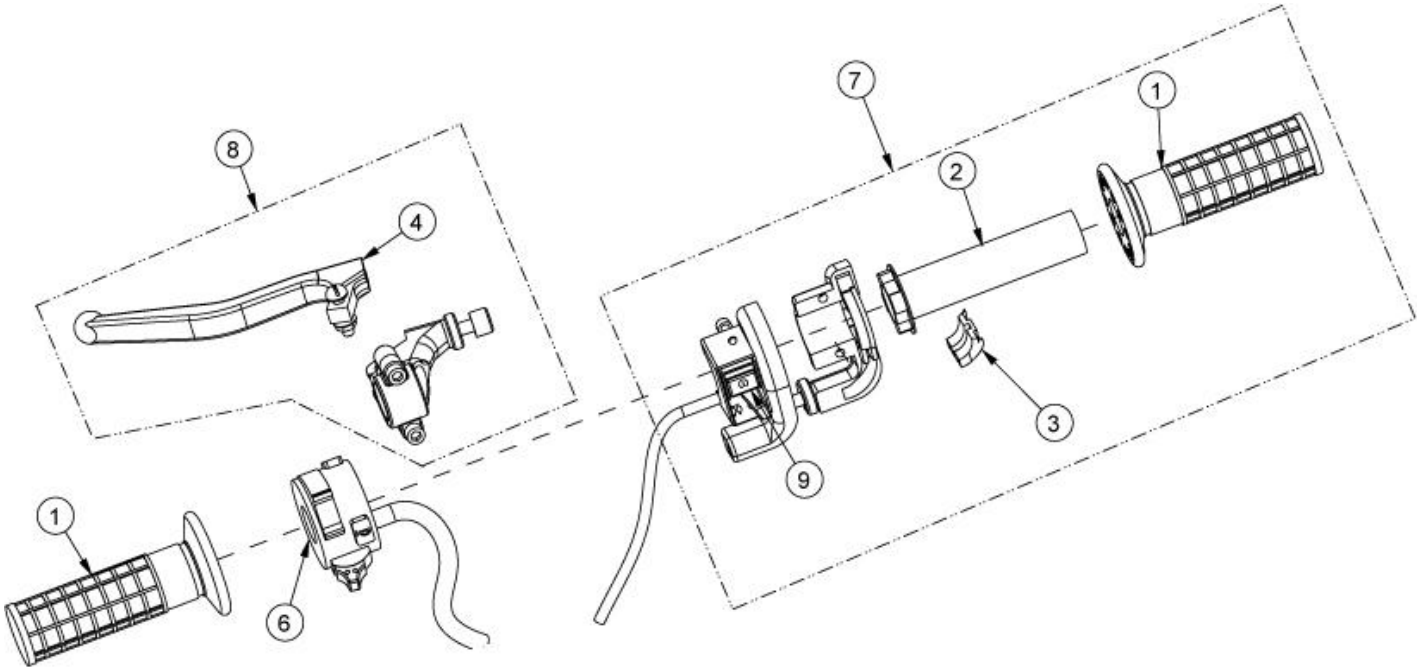

AJP	PARTS LIST	Ref[a]:	PL028EN
		Model:	PR4
	HANDLEBAR	Date:	October 2009
		Edition:	2nd

Item	REFERENCE	DESCRIPTION	Qt.
1	00COS01B0005	Throttle Cable	1
2	00COS01A0007	Clutch Cable	1
3	00COS01A0001	Handlebar	1
4	00COS01A0021	Rear View Mirror	2
5	00PLS01A0062	Hand Gards Black	1
	00PLS01A0073	Hand Gards White	1

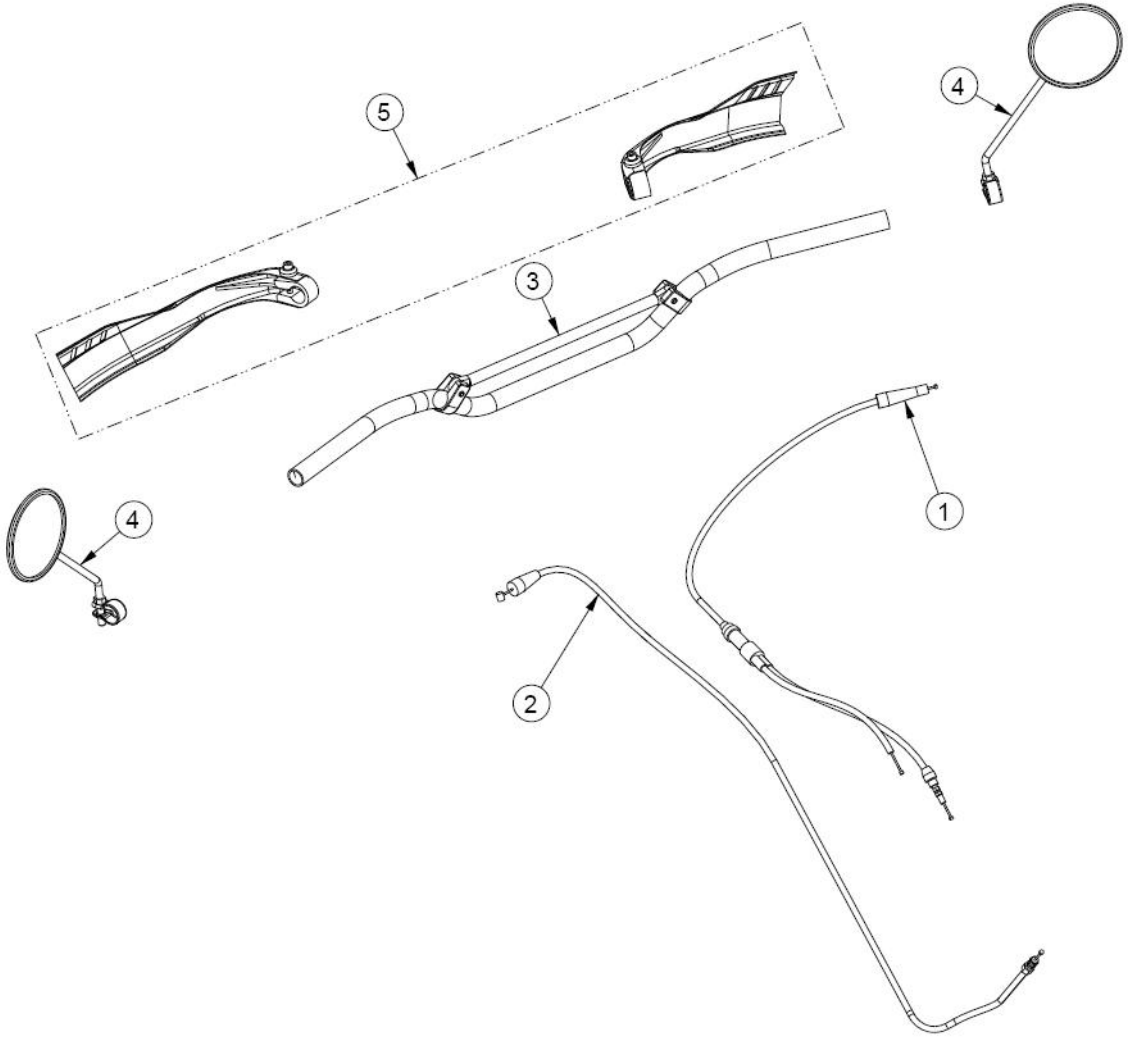

	PARTS LIST	Ref[a]:	PL029EN
		Model:	PR4
	SEAT	Date:	October 2009
		Edition:	2nd

Item	REFERENCE	DESCRIPTION	Qt.
1	00BAS01A0026	Seat Cover	1
2	PF0912006030	Screw Din912 M6x30	1
3	AN9021006000	Washer Din9021 M6	1
4	00BAS01A0028	Inner Washer	1
5	00BAC01A0025	Seat Assembly	1

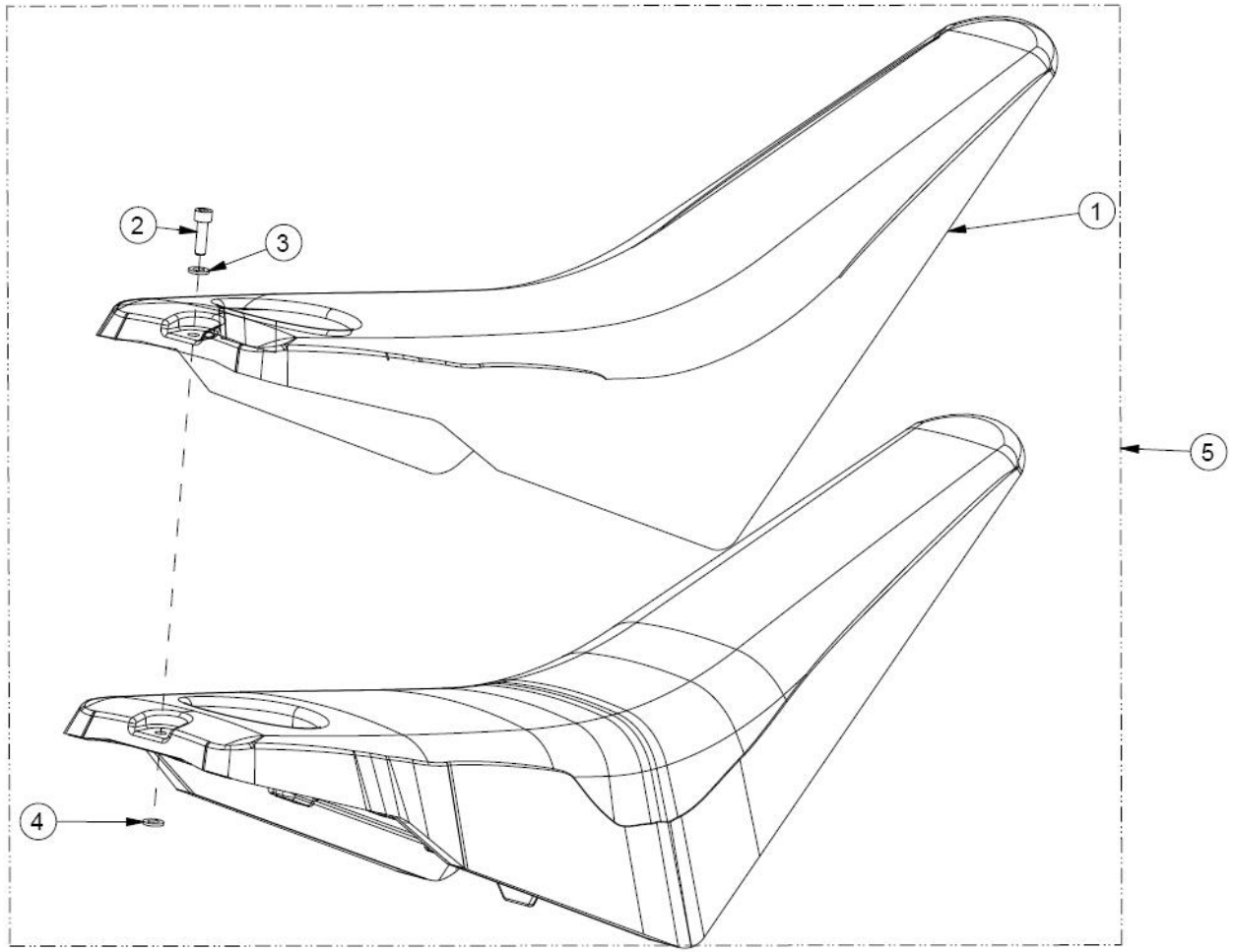

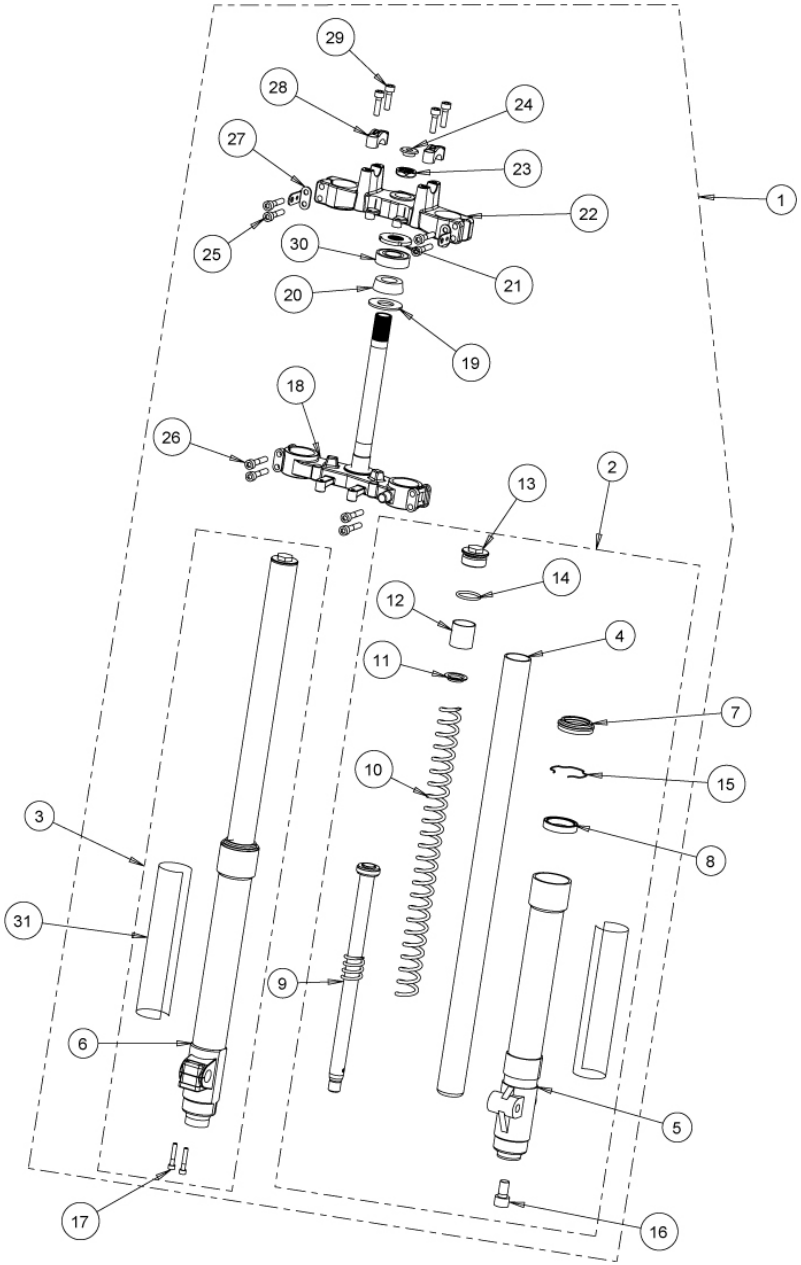

AJP	PARTS LIST	Ref[a]:	PL030EN
		Model:	PR4
	PAIOLI FRONT FORK	Date:	October 2009
		Edition:	2nd

Item	REFERENCE	DESCRIPTION	Qt.
1	00SFC01A0001	Front Fork	1
2	00SFC01A0002	Fork Leg Assembly LH	1
3	00SFC01A0003	Fork Leg Assembly RH	1
4	00SFS01A0008	Inner Tube Assembly	2
5	00SFS01A0009	Outer Tube Assembly LH	1
6	00SFS01A0010	Outer Tube Assembly RH	1
7	00SFS01A0013	Dust Seal	2
8	00SFS01A0014	Oil Seal	2
9	00SFS01A0012	Front Damper Rod	2
10	00SFS01A0011	Spring	2
11	00SFS01A0021	Washer	2
12	00SFS01A0020	Pre-Charge Spacer	2
13	00SFS01A0018	Fork Bolt	2
14	00SFS01A0019	O-Ring 41x2,5	2
15	00SFS01A0015	Stopper Ring	2
16	PF0912014025	Screw Din912 M14x25x1,5	2
17	PF0912006035	Screw Din912 M6x35	2
18	00SFS01A0003	Lower Bracket	1
19	00SFS01A0001	Washer 51,2x25x3	1
20	RL000032005C	Bearing 32005C	1
21	00SFS01A0007	Steering Nut	1
22	00SFS01A0002	Upper Bracket	1
23	00SFS01A0006	Nut M25x1	1
24	00SFS01A0005	Plug	1
25	PF7984008040	Screw Din7894 M8x40	4
26	PF7984008045	Screw Din7894 M8x45	4
28	00SFS01A0016	Handlebar Holder	2
29	PF0912008030	Screw Din912 M8x30	4
30	RL00006205RS	Bearing 6205RS	1
31	00BAS01A0016	Stickers Assembly	1

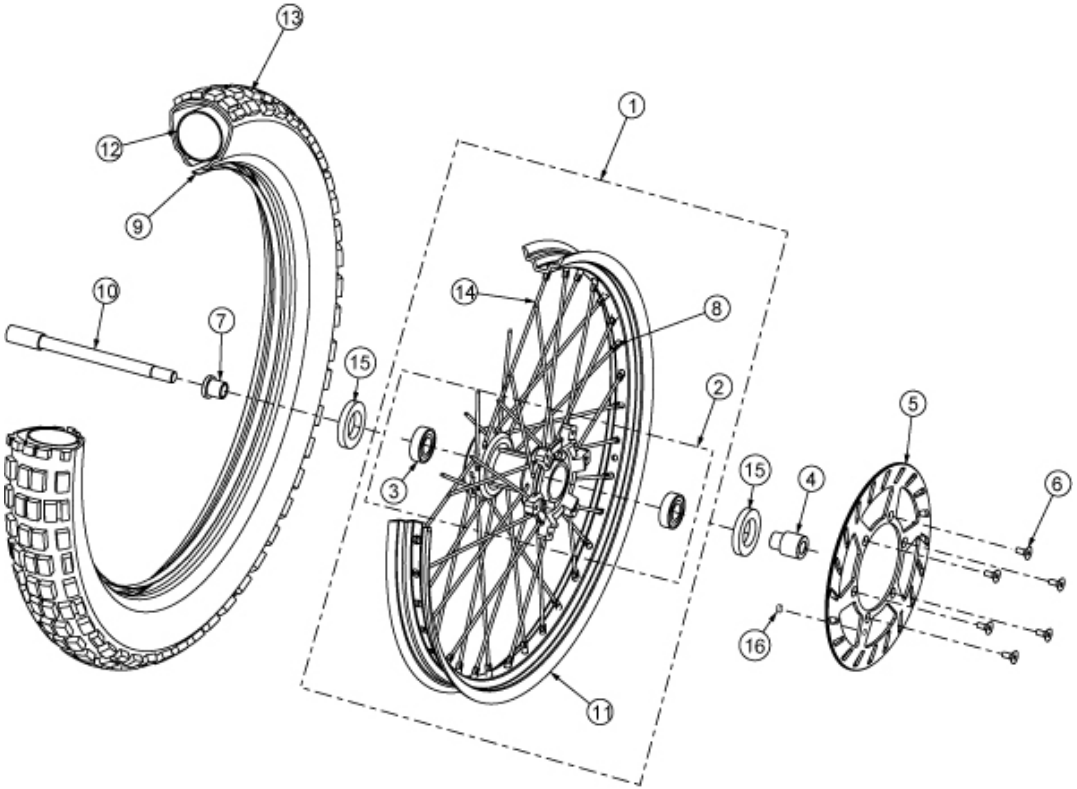

AJP	PARTS LIST	Ref[a]:	PL031EN
		Model:	PR4
	FRONT WHEEL	Date:	October 2009
		Edition:	2nd

Item	REFERENCE	DESCRIPTION	Qt.
1	00RFC01A0001	Front Wheel EN	1
	00RFC01A0002	Front Wheel SM	1
2	00RFS01A0011	Hub	1
3	RL00060042RS	Bearing 6004 2RS	2
4	00RFS07A0048	Spacer, LH	1
5	00RFS01A0012	Front Brake Disc	1
6	PF7991006016	Screw Din7991 M6x16	6
7	00RFS07A0049	Spacer, RH	1
8	00RTS01A0051	Spoke Nut	36
9	00RFS01A0023	Wheel Rim Tape 1.60/1.85x21	1
	00RFS01A0046	Wheel Rim Tape 1.35/1.85x17”	1
10	00RFS07A0020	Front Axle	1
11	00RFS01A0009	Rim EN 1,60”x21”	1
	00RFS01A0010	Rim SM 2,50”x17”	1
12	00RFS01A0005	Inner Tube EN 21”	1
	00RFS01A0006	Inner Tube SM 17”	1
13	00RFS01A0002	Tyre Michelin EN 90/90-21”	1
	00RFS01A0001	Tyre Michelin TR 90/90-21”	1
	00RFS01A0003	Tyre Michelin SM 100/80-17”	1
14	00RFS01A0014	Spoke En 21”	36
	00RFS01A0015	Spoke SM 17”	36
15	00RFS01A0047	Dust seal 24x42x7	2
16	00RFS01A0042	Front Disc Magnet	1

AJP	PARTS LIST	Ref[a]:	PL032EN
		Model:	PR4
	FRONT CALIPER	Date:	October 2009
		Edition:	2nd

Item	REFERENCE	DESCRIPTION	Qt.
1	00TRC01A0065	Front Capiler	1
2	00TRS01A0015	Pad Set	1
3	00TRS01A0016	Piston Set	1
4	00TRS01A0020	Bleeder	1
5	00TRS01A0021	Bleeder Cap	1
6	00TRS01A0019	Clip	2
7	00TRS01A0017	Boot	1
8	00TRS01A0018	Boot	1
9	00TRS01A0024	Pin	1
10	00TRS01A0023	Pin	1
11	PC6923008000	Nut Din6923 M8	1
12	00STS07A0065	Front Caliper Bracket	1
13	AN0125008000	Washer Din 125 M8	2
14	PF0933008035	Screw Din933 M8x35	1
	PF0912008050	Screw Din912 M8x50	1
15	AN0127008000	Washer Din127 M8	2
16	00TRS01A0063	Speedometer Sensor Bracket	1
17	00ELS01A0038	Speedometer Sensor	1
18	PF7380006012	Screw Din7380 M6x12	1
19	00TRS07A0064	Spacer	1

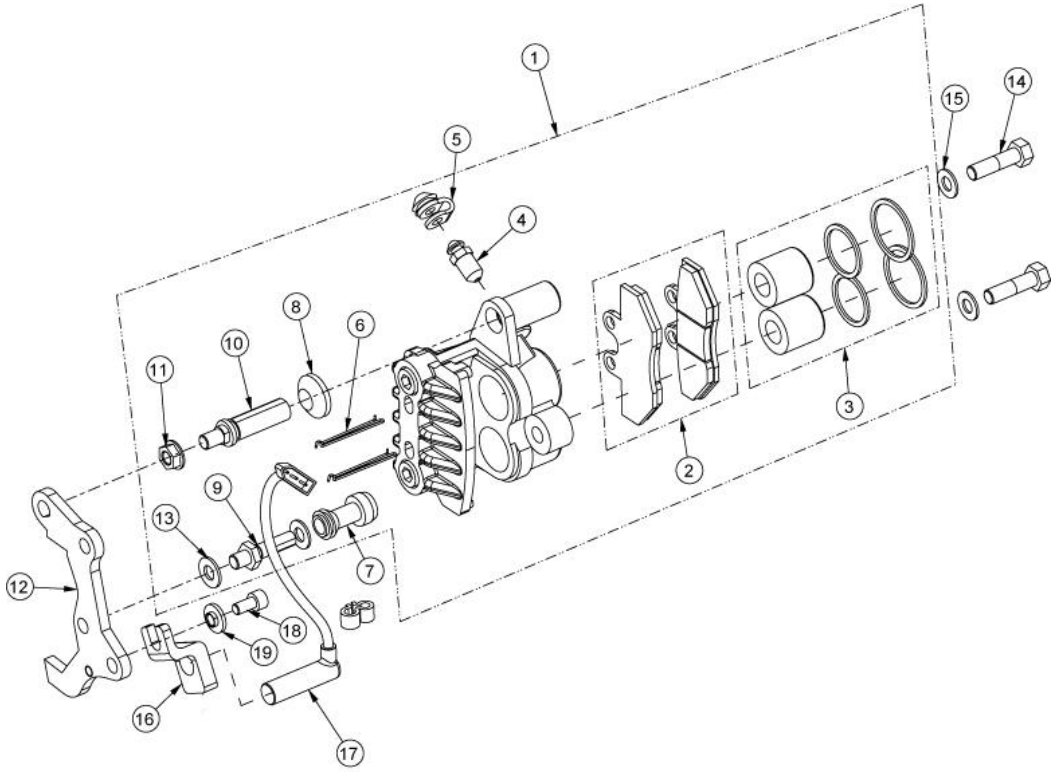

AJP	PARTS LIST	Ref[a]:	PL033EN
		Model:	PR4
	REAR CUSHION LEVER	Date:	October 2009
		Edition:	2nd

Item	REFERENCE	DESCRIPTION	Qt.
1	00STC07A0004	Frame Link Assembly	1
2	00STC07A0005	Rear Arm Link Assembly	1
3	RL00HK2016RS	Bearing HK2016 RS	2
4	RL00HK1814RS	Bearing HK1814 RS	2
5	RL00HK1620RS	Bearing HK1620 RS	2
6	00STS07A0025	Spacer 10x16x65	1
7	00STS07A0022	Spacer 12x18x41	1
8	00STS07A0021	Spacer 12x20x50	1
9	00STS01B0020	Washer 16x30x2.5	2
10	00STS01A0019	Washer 20x30x2.5	2
11	PF0912010090	Screw Din912 M10x90	1
12	PF0912012080	Screw Din912 M12x80	1
13	PF0912012105	Screw Din912 M12x105	1
14	AN0125012000	Washer Din125 M12	2
15	PC0985012000	Nut Din985 M12	2
16	PC0982010000	Nut Din982 M10	1

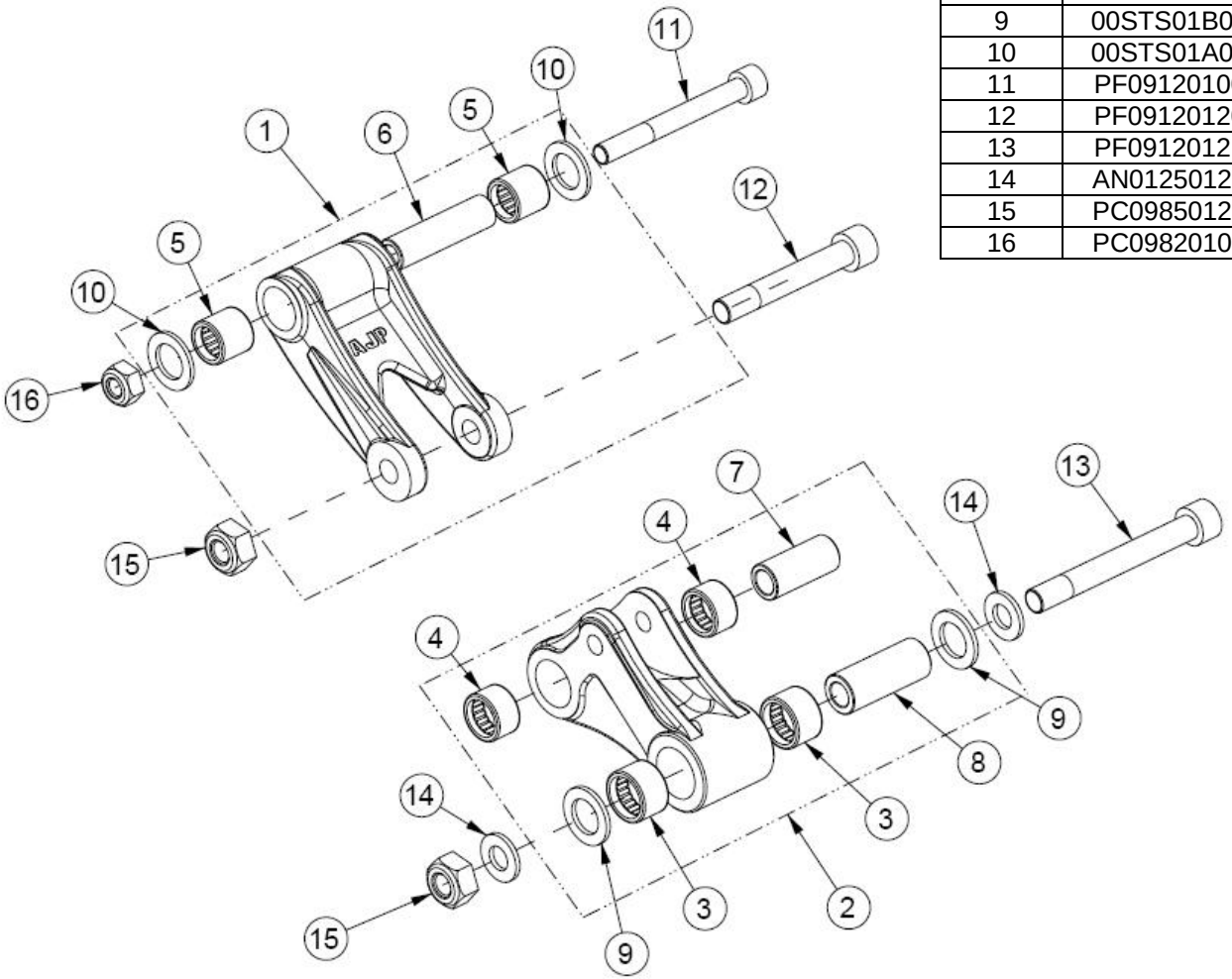

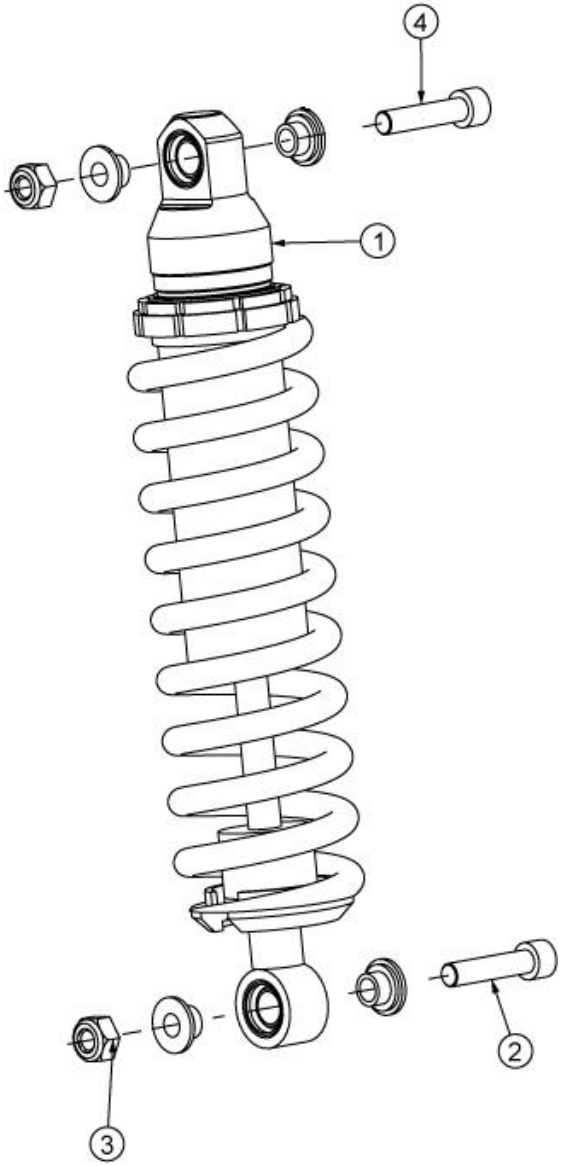

AJP	PARTS LIST	Ref[a]:	PL034EN
		Model:	PR4
	REAR SHOCK ABSORBER	Date:	October 2009
		Edition:	2nd

Item	REFERENCE	DESCRIPTION	Qt.
1	00STC01A0072	Rear Shock Absorber Assembly Sachs	1
2	PF0912010050	Screw Din912 M10x50	1
3	PC0982010000	Nut Din982 M10	2
4	PF0912010080	Screw Din912 M10x80	1

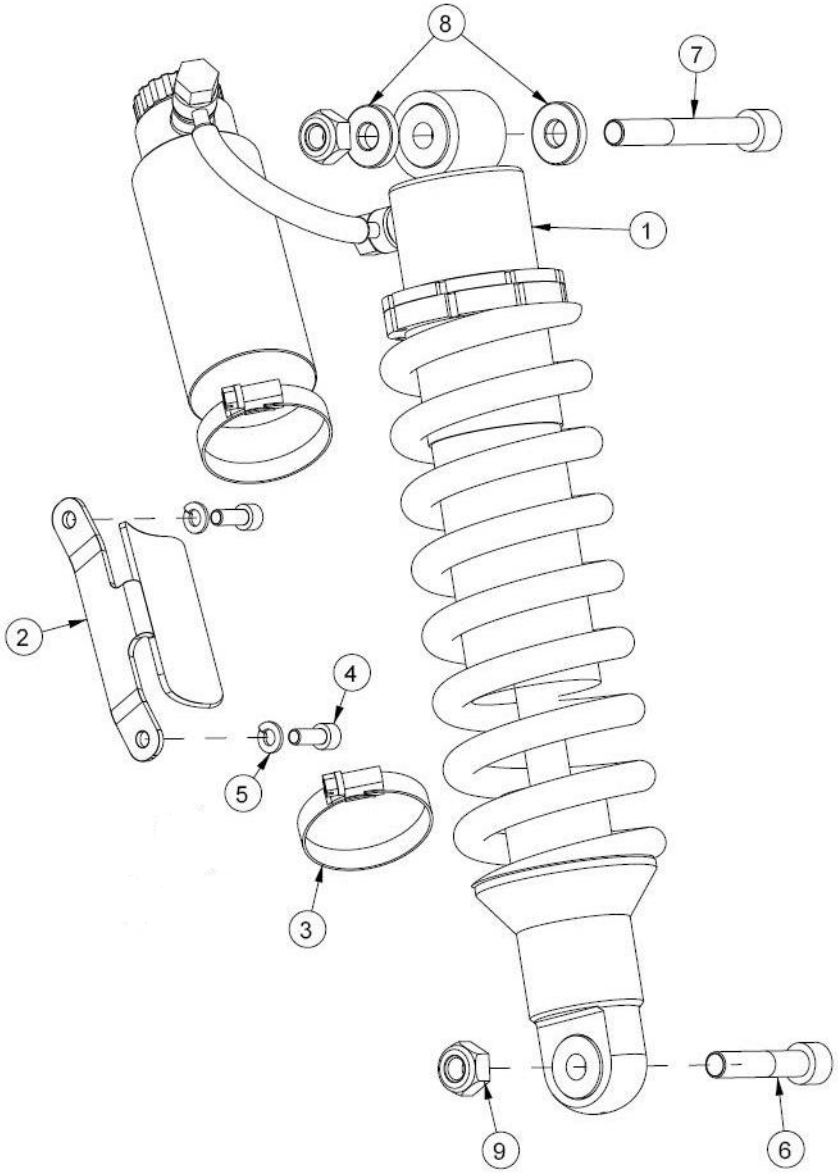

AJP	PARTS LIST	Ref[a]:	PL035EN
		Model:	PR4
	SHOCK ABSORBER PRO	Date:	October 2009
		Edition:	2nd

Item	REFERENCE	DESCRIPTION	Qt.
1	00STC01A0073	Shock Absorber Sachs Pro	1
2	00QUS07A0035	Reservoir Bracket	1
3	00STS01A0036	Reservoir Clamp	2
4	PF0933006016	Screw Din933 M6x16	2
5	AN0125006000	Washer Din125 M6	2
6	PF0912010050	Screw Din912 M10x50	1
7	PF0912010080	Screw Din912 M10x80	1
8	00STS07A0030	Spacer 5x10x24	2
9	PC0982010000	Nut Din982 M10	2

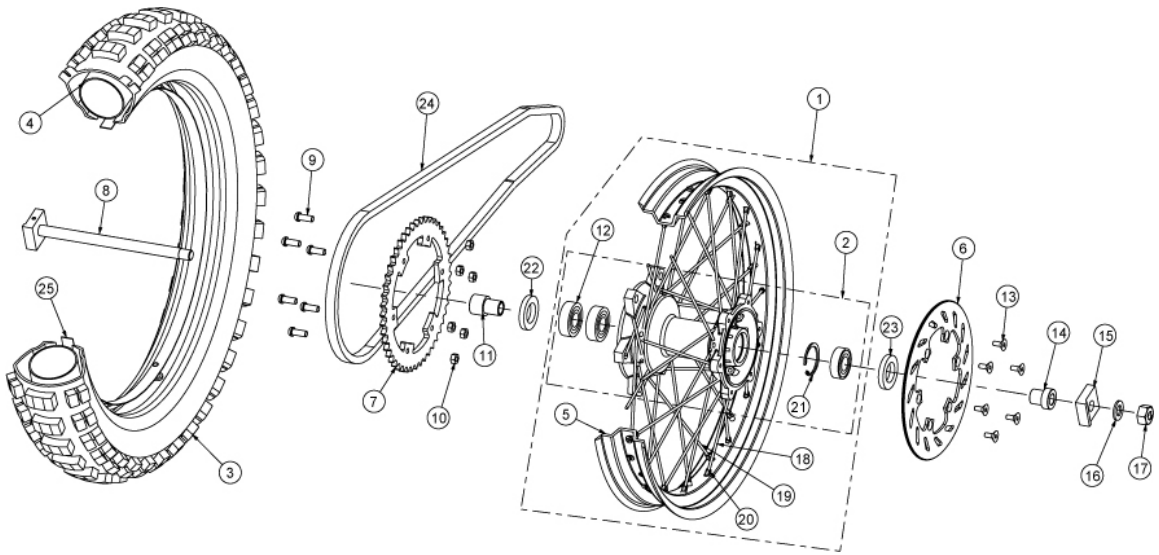

AJP	PARTS LIST	Ref[a]:	PL036EN
		Model:	PR4
	REAR WHEEL	Date:	October 2009
		Edition:	2nd

Item	REFERENCE	DESCRIPTION	Qt.
1	00RTC01A0001	Rear Wheel EN	1
	00RTC01A0002	Rear Wheel SM	1
2	00RTS01A0012	Hub	1
3	00RTS01A0002	Tyre Michelin EN 120/90-18”	1
	00RTS01A0003	Tyre Michelin TR 120/80-18”	1
	00RTS01A0003	Tyre Michelin SM 130/70-17”	1
4	00RTS01A0005	Inner Tube EN 18”	1
	00RTS01A0006	Inner Tube SM 17”	1
5	00RTS01A0010	Wheel Rim EN 2,15x18”	1
	00RTS01A0011	Wheel Rim SM 3,50x17”	1
6	00RTS01A0055	Rear Brake Disc	1
7	00RTS01A0008	Sprocket Z48	1
	00RTS01B0008	Sprocket Z50	1
8	00RTS07A0040	Rear Shaft	1
9	PF7380008020	Screw Din7380 M8x20	6
10	PC0985008000	Nut Din985 M8	6
11	00RTS07A0057	Spacer LH	1
12	RL00062042RS	Bearing 6204-2RS	3
13	PF7991006016	Screw Din7991 M6x16	6
14	00RTS07A0056	Spacer RH	1
15	00RTS02A0042	Chain Adjuster RH	1
16	AN0125015000	Washer Din125 M15	1
17	PC0934014000	Nut Din934 M14	1
18	00RTS01A0014	Spoke EN RH	18
	00RTS01A0016	Spoke SM RH	18
19	00RTS01A0013	Spoke EN LH	18
	00RTS01A0015	Spoke SM LH	18
20	00RFS01A0016	Spoke Nut	36
21	00RTS01A0021	Circlip	1
22		Dust Seal 28x47x7	1
23	00RTS01A0024	Dust Seal 28x42x7	1
24	00MTS01A0019	Chain	1
25	00RTS01A0025	Wheel Rim Tape 1.60/2.00x18”	1
	00RTS01A0060	Wheel Rim Tape 2.15/3.00x17”	1

AJP	PARTS LIST	Ref[a]:	PL037EN
		Model:	PR4
	REAR BRAKE	Date:	October 2009
		Edition:	2nd

Item	REFERENCE	DESCRIPTION	Qt.
1	00TRC01A0066	Rear Brake Caliper Assembly	1
2	00TRS01A0067	Piston Set	1
3	00TRS01A0068	Pad Set	1
5	00TRS01A0019	Clip	1
6	00TRS01A0020	Bleeder	1
7	00TRS01A0029	Bleeder Cap	1
8	00TRS01A0012	Washer	2
9	00TRS01A0011	Bolt M10x21	2
10	00TRS01A0037	Holder	4
11	PF0912006016	Screw Din912 M6x16	2
12	AN0125006000	Washer M6	1
13	PF0738006012	Screw Din738 M6x12	2
14	00TRS01A0039	Stop Valve	1
15	PF7380006020	Screw Din738 M6x20	1
16	00TRC01A0051	Rear Master Cylinder	1
17	00TRS01A0052	Piston & Cup Set	1
18	00TRS01A0056	Rear Brake Hose	1

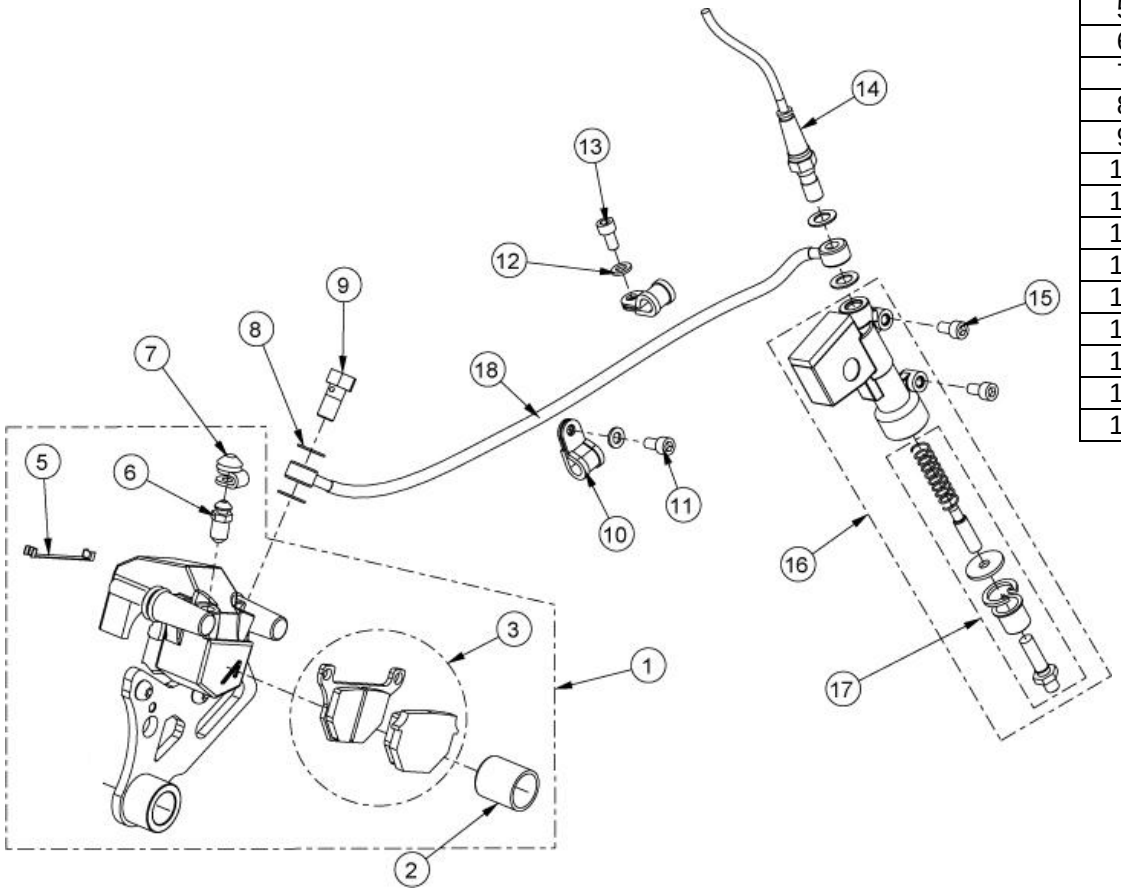

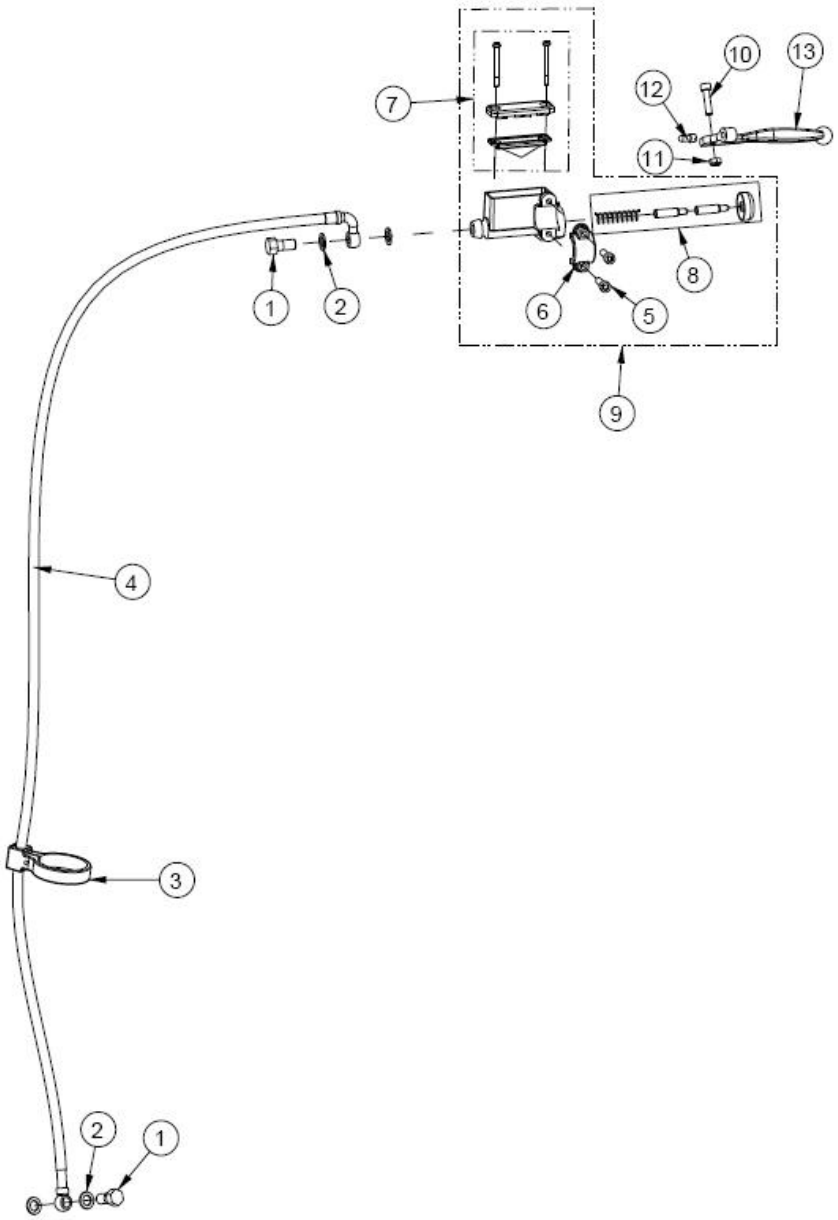

AJP	PARTS LIST	Ref[a]:	PL038EN
		Model:	PR4
	FRONT MASTER CYLINDER	Date:	October 2009
		Edition:	2nd

Item	REFERENCE	DESCRIPTION	Qt.
1	00TRS01A0011	Bolt M10x21	2
2	00TRS01A0012	Washer M10	4
3	00TRS01A0007	Clamp	1
4	00TRS01A0061	Front Brake Hose	1
5	PF0912006020	Screw Din912 M6x20	2
6	00TRS01A0009	Clamp	1
7	00TRS01A0010	Diaphragm Set	1
8	00TRS01A0013	Piston & Cup Set	1
9	00TRS01A0008	Front Master Cylinder Assembly	1
10	PF0912006025	Screw DIN912 M6x25	1
11	PC0985006000	Nut DIN985 M6	1
12	00TRS01A0062	Adjust Screw	1
13	00TRS01A0001	Clutch Lever	1

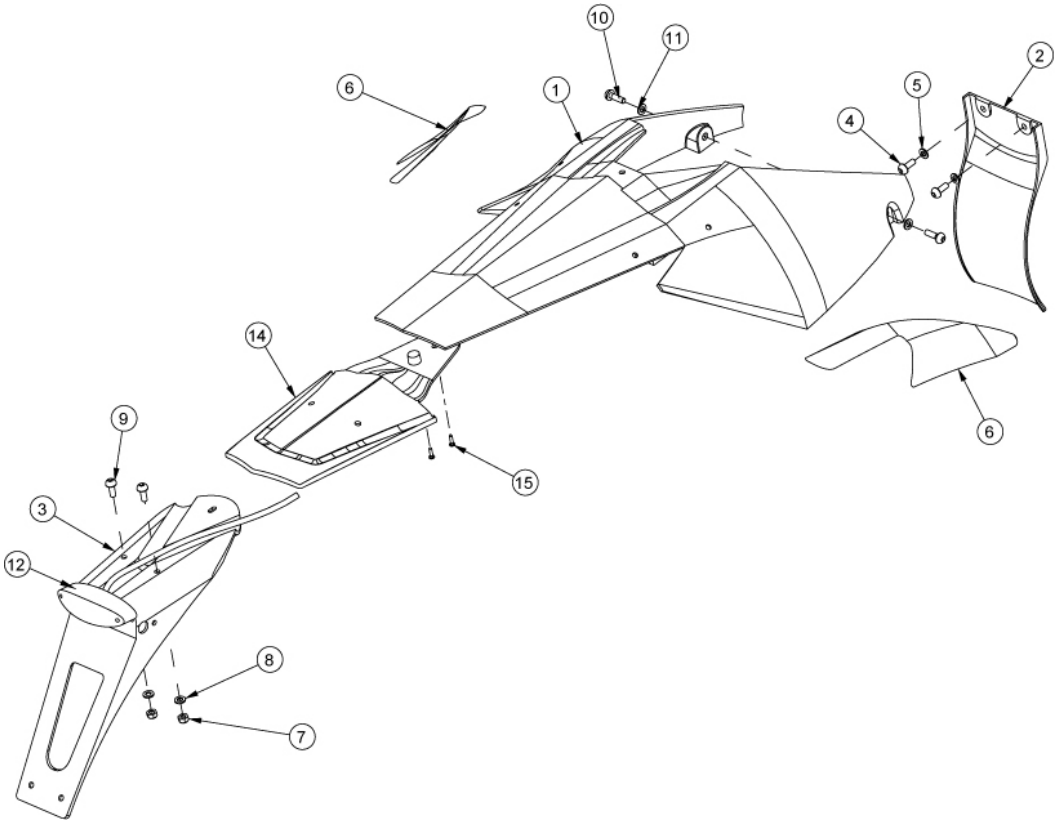

AJP	PARTS LIST	Ref[a]:	PL039EN
		Model:	PR4
	REAR FENDER	Date:	October 2009
		Edition:	2nd

Item	REFERENCE	DESCRIPTION	Qt.
1	00PLS01A0052	Rear Fender Black	1
	00PLS01A0074	Rear Fender White	1
2	00PLS01A0013	Mud Gard	1
3	00PLC01A0006	Rear Fender Spoiler	1
4	PF7380006012	Screw Din738 M6x12	2
5	AN0125006000	Washer Din125 M6	2
6	00BAS01A0036	Sticker EN 125 RH	1
	00BAS01A0058	Sticker EN 125 RH 2010 Black	1
	00BAS01A0060	Sticker EN 125 RH 2010 White	1
	00BAS01A0037	Sticker EN 125 LH	1
	00BAS01A0059	Sticker EN 125 LH 2010 Black	1
	00BAS01A0061	Sticker EN 125 LH 2010 White	1
	00BAS01A0040	Sticker EN 200 RH	1
	00BAS01A0062	Sticker EN 200 RH 2010 Black	1
	00BAS01A0064	Sticker EN 200 RH 2010 White	1
	00BAS01A0041	Sticker EN 200 LH	1
	00BAS01A0063	Sticker EN 200 LH 2010 Black	1
	00BAS01A0065	Sticker EN 200 LH 2010 White	1
	00BAS01A0038	Sticker SM 125 RH	1
	00BAS01A0066	Sticker SM 125 RH 2010 Black	1
	00BAS01A0068	Sticker SM 125 RH 2010 White	1
	00BAS01A0039	Sticker SM 125 LH	1
	00BAS01A0067	Sticker SM 125 LH 2010 Black	1
	00BAS01A0069	Sticker SM 125 LH 2010 White	1
	00BAS01A0042	Sticker SM 200 RH	1
	00BAS01A0070	Sticker SM 200 RH 2010 Black	1
	00BAS01A0072	Sticker SM 200 RH 2010 White	1
	00BAS01A0043	Sticker SM 200 LH	1
	00BAS01A0071	Sticker SM 200 LH 2010 Black	1
	00BAS01A0073	Sticker SM 200 LH 2010 White	1
7	PC0985006000	Nut Din985 M6	2
8	AN0125006000	Washer Din125 M6	2
9	PF7380006020	Screw Din738 M6x20	2
10	PF7380006016	Screw Din738 M6x16	2
11	AN9021006000	Washer Din9021 M6	2
12	00PLS01A0065	Led Light	1
14	00PLS01A0063	Rear Fender Suplement	1
15	PF6928004816	Screw Din6928 4,8x16	2

AJP	PARTS LIST	Ref[a]:	PL040EN
		Model:	PR4
	BATTERY	Date:	October 2009
		Edition:	2nd

Item	REFERENCE	DESCRIPTION	Qt.
1	00ELS01B0001	Battery YTX5LBS	1
2	00ELS04A0003	Battery holder	1
3	00ELS01A0004	Band	1
4	PF0912006016	Screw Din912 M6x16	1
5	PF7991006016	Screw Din7991 M6x16	1
6	PC0985006000	Nut Din985 M6	1

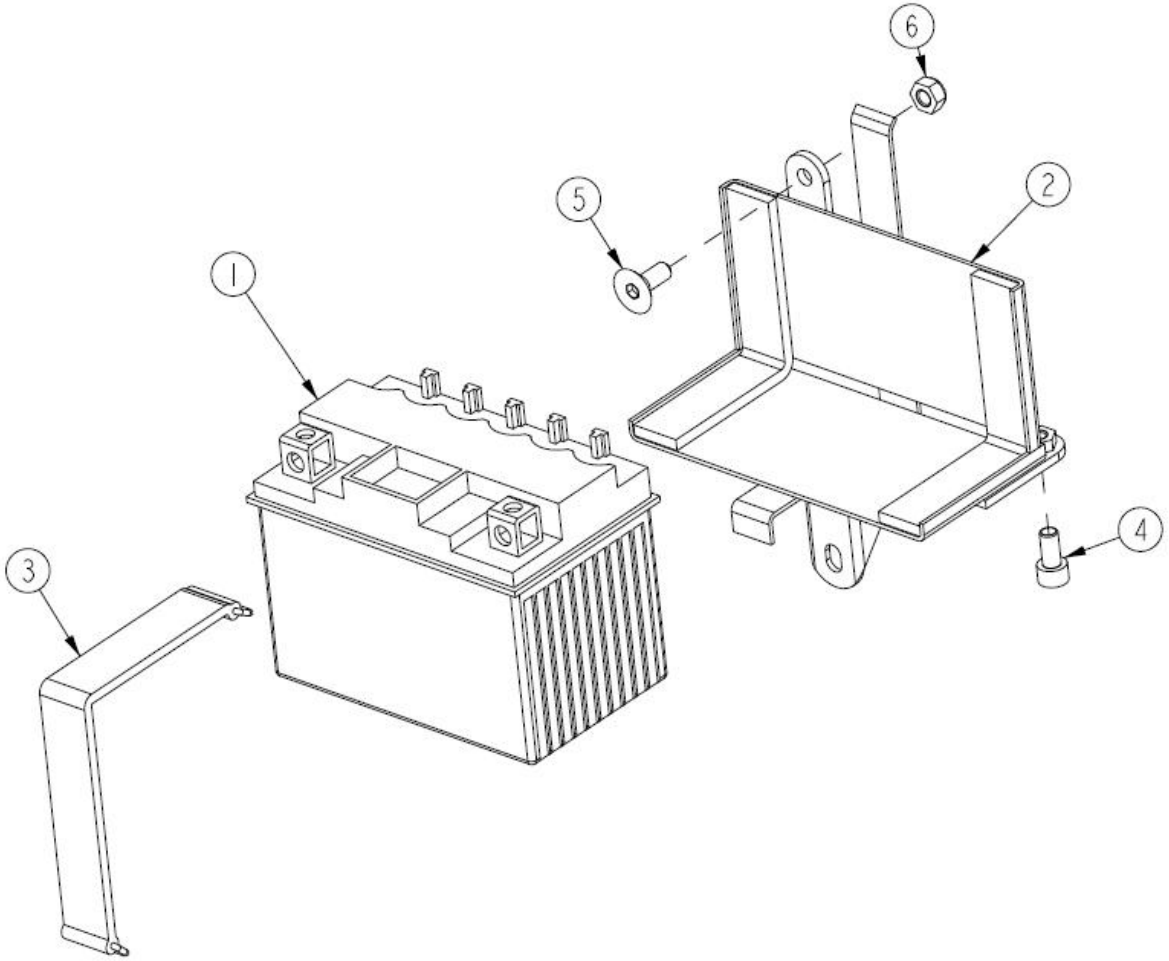

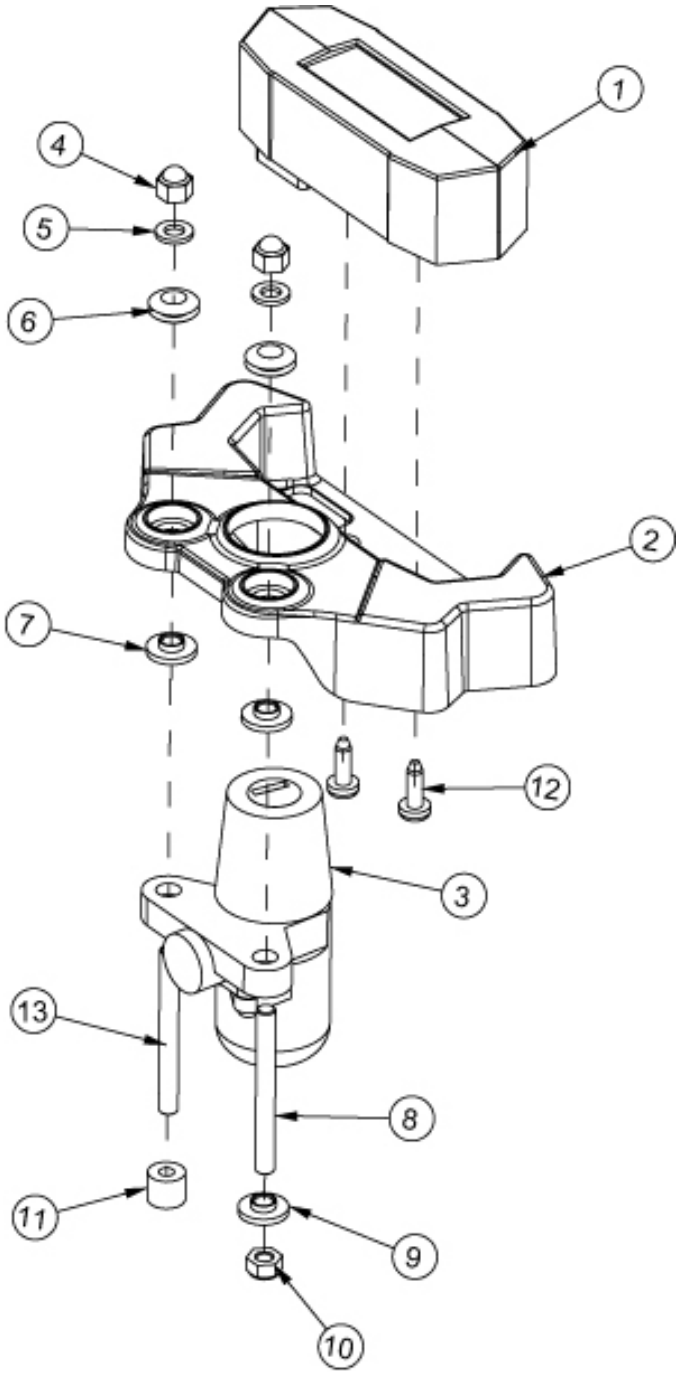

AJP	PARTS LIST	Ref[a]:	PL041EN
		Model:	PR4
	COCKPIT	Date:	October 2009
		Edition:	2nd

Item	REFERENCE	DESCRIPTION	Qt.
1	00ELS01A0036	Speedometer	1
2	00ELS01A0035	Speedometer Cover	1
3	00COS01A0018	Ignition Switch Assembly	1
4	PC1587006000	Nut Din1587 M6	2
5	AN0125006000	Washer Din125 M6	2
6	00COS01A0016	Cushion	2
7	00COS07A0030	Spacer	2
8	00COS01A0022	Stud M6x60	1
9	00COS07A0015	Spacer 16x4.4x6	1
10	PC0985006000	Nut Din985 M6	1
11	00COS01A0023	Nut M6 Fuse	1
12	PFCH88H4213	Screw DinCH88H M4.2x13	2
13	00COS01A0023	Stud M6x50	1

	LISTA DE PEÇAS	Ref[a]:	PL042EN
		Model:	PR4
	TURN SIGNAL	Date:	October 2009
		Edlition:	2nd

Item	REFERENCE	DESCRIPTION	Qt.
1	00ELC01A0002	Turn Lamp Assembly LH	2
2	00ELC01A0001	Turn Lamp Assembly RH	2
3	PF7380006016	Screw Din738 M6x16	4
4	AN0125006000	Washer Din125 M6	4
5	PC0985006000	Nut Din985 M6	4

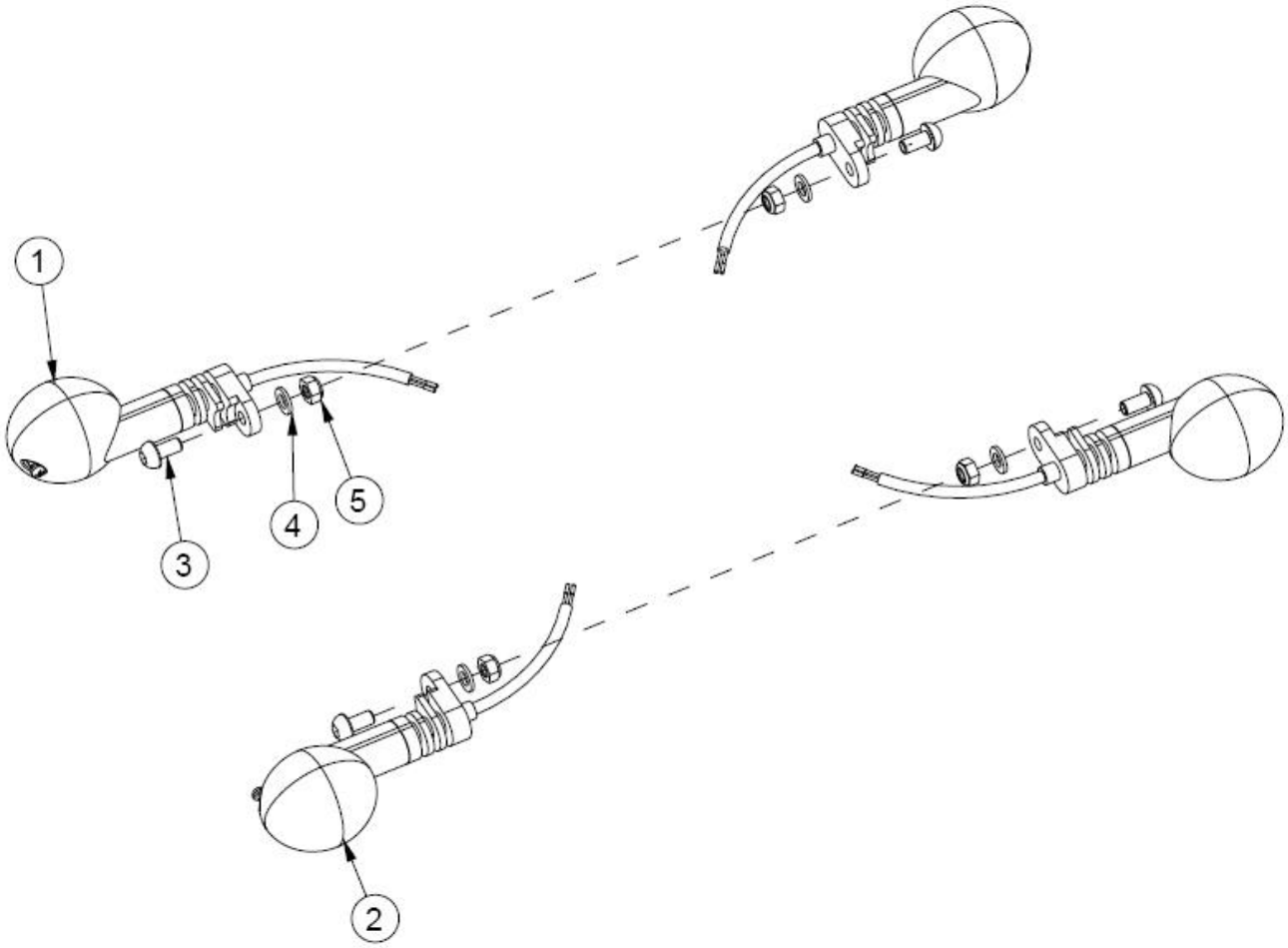

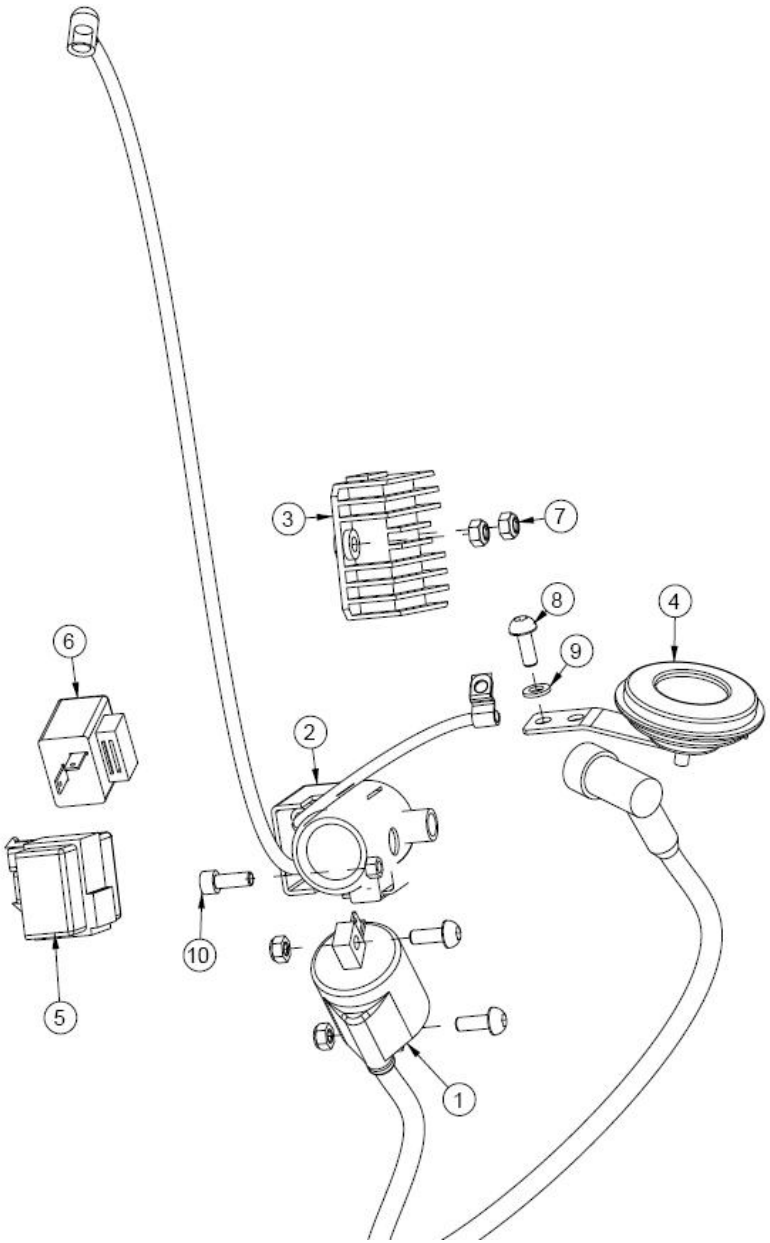

AJP	PARTS LIST	Ref[a]:	PL043EN
		Model:	PR4
	ELECTRICAL	Date:	October 2009
		Edition:	2nd

Item	REFERENCE	DESCRIPTION	Qt.
1	91A-23140-00-00	Ignition Coil Assembly	1
2	93A-28310-00-00	Starter Relay	1
3	94A-21310-00-00	Rectifier	1
4	00ELS01A0005	Horn 12V cc	1
5	93A-23100-00-00	CDI	1
6	00ELS01A0006	Turn Lights Relay	1
7	PC0985006000	Nut Din985 M6	4
8	PF7380006016	Screw Din738 M6x16	2
9	AN0125006000	Washer Din125 M6	1
10	PF0738006012	Screw Din738 M6x12	1

AJP	PARTS LIST	**Ref[a]:**	PL044EN
		Model:	PR4
	WIRING HARNESS	**Date:**	October 2009
		Edition:	2nd

Item	REFERENCE	DESCRIPTION	Qt.
1	00ELC01A0038	Wiring Harness	1
2	00ELS01A0017	Fuse	1
3	00ELS01A0037	Speedometer wiring	1

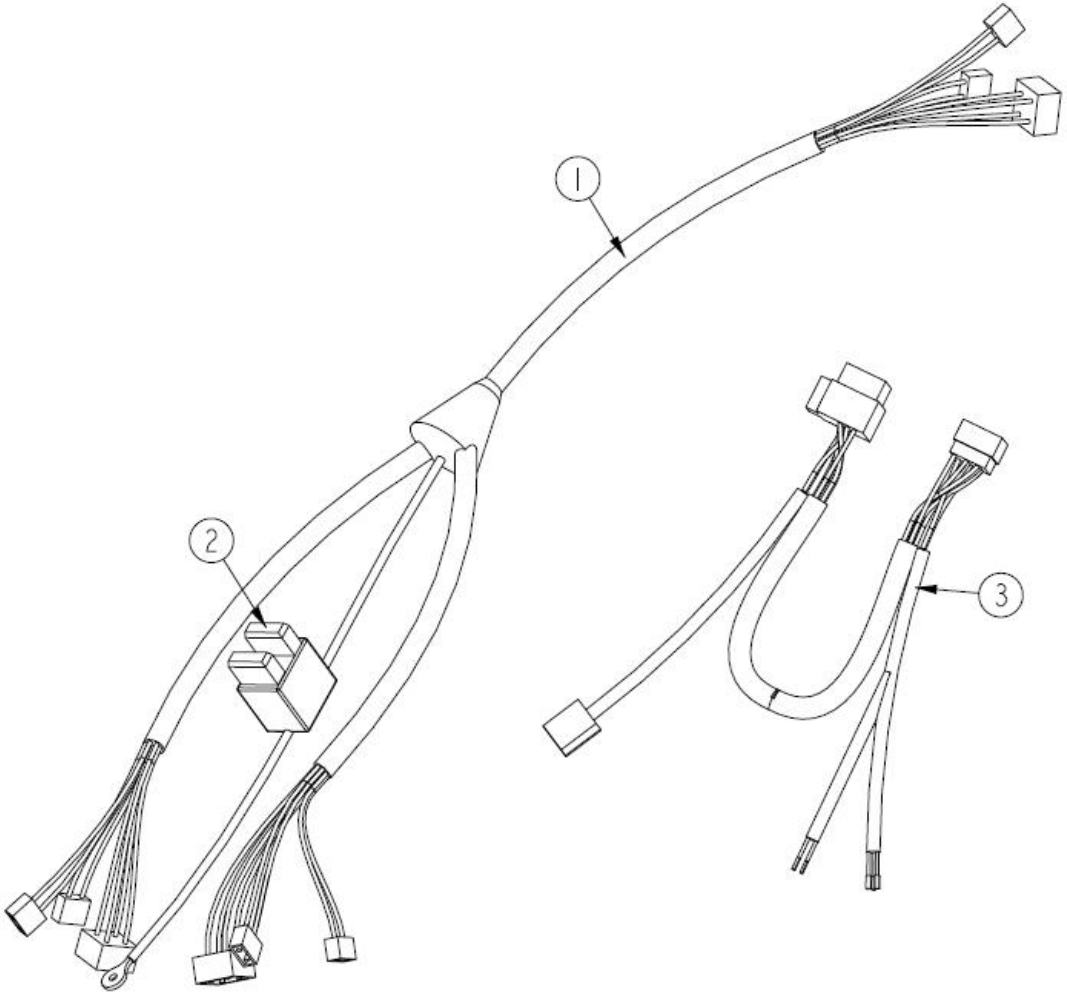

Parts Catalogue
AJP PR4

2nd Edition
October 2009

AJP-MOTOS, SA. All rights reserved.

The content of this document cannot de reproduced or transmitted by any way or mean, electronic or mechanic, for all purposes, without written authorization from AJP MOTOS.

AJP-MOTOS, SA
Rua de Santana, 91
4620-501 Pias Lousada
Portugal
Tel: +351 255 815 122
Fax: +351 255 815 123
E-mail: info@ajpmotos.com
Site: www.ajpmotos.com